SUPRA®

VHS VIDEO CASSETTE RECORDER

MODEL : SV T21

CIRCUIT DIAGRAMS

1. Power Circuit Diagram

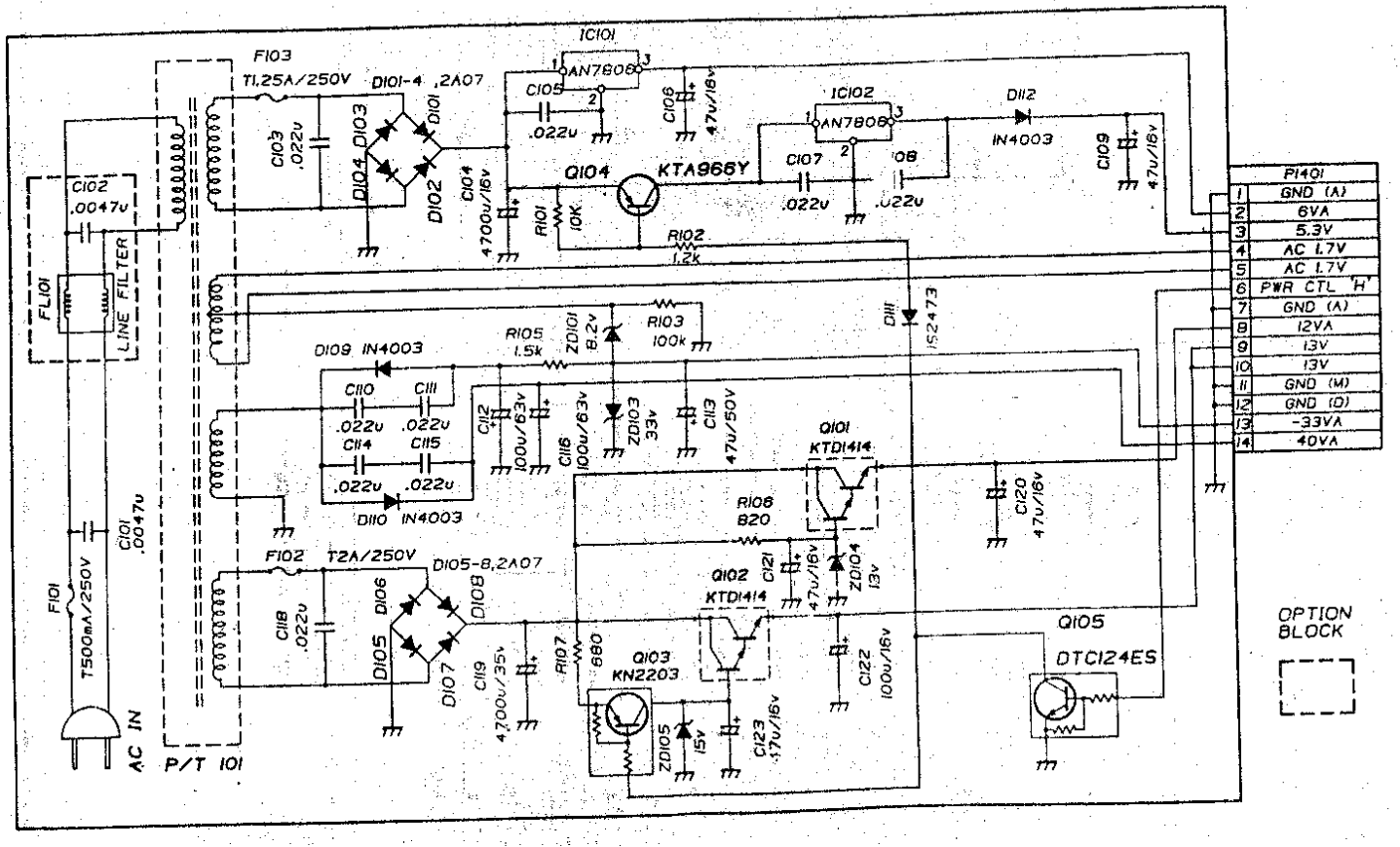

2. Servo Circuit Diagram

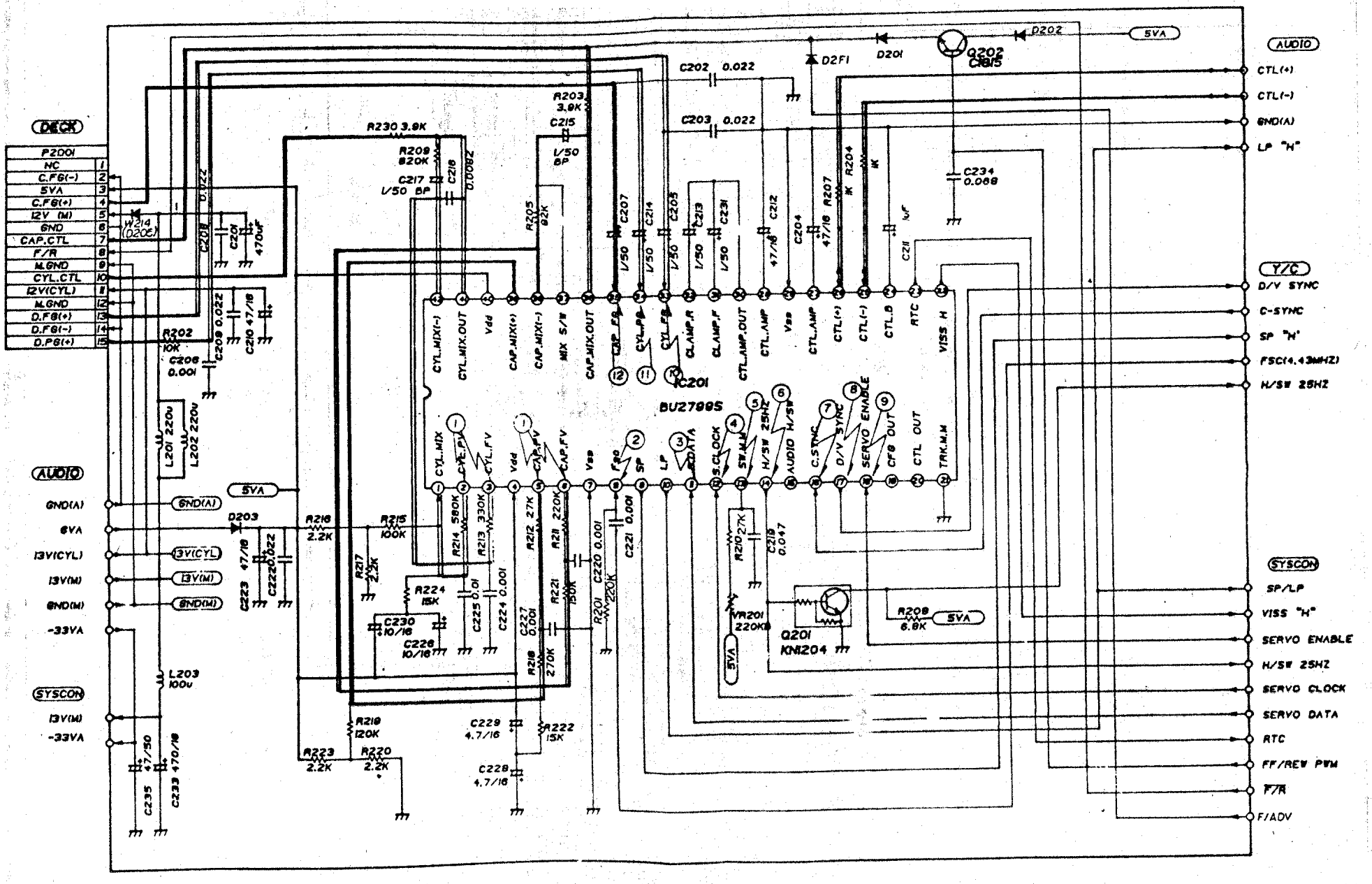

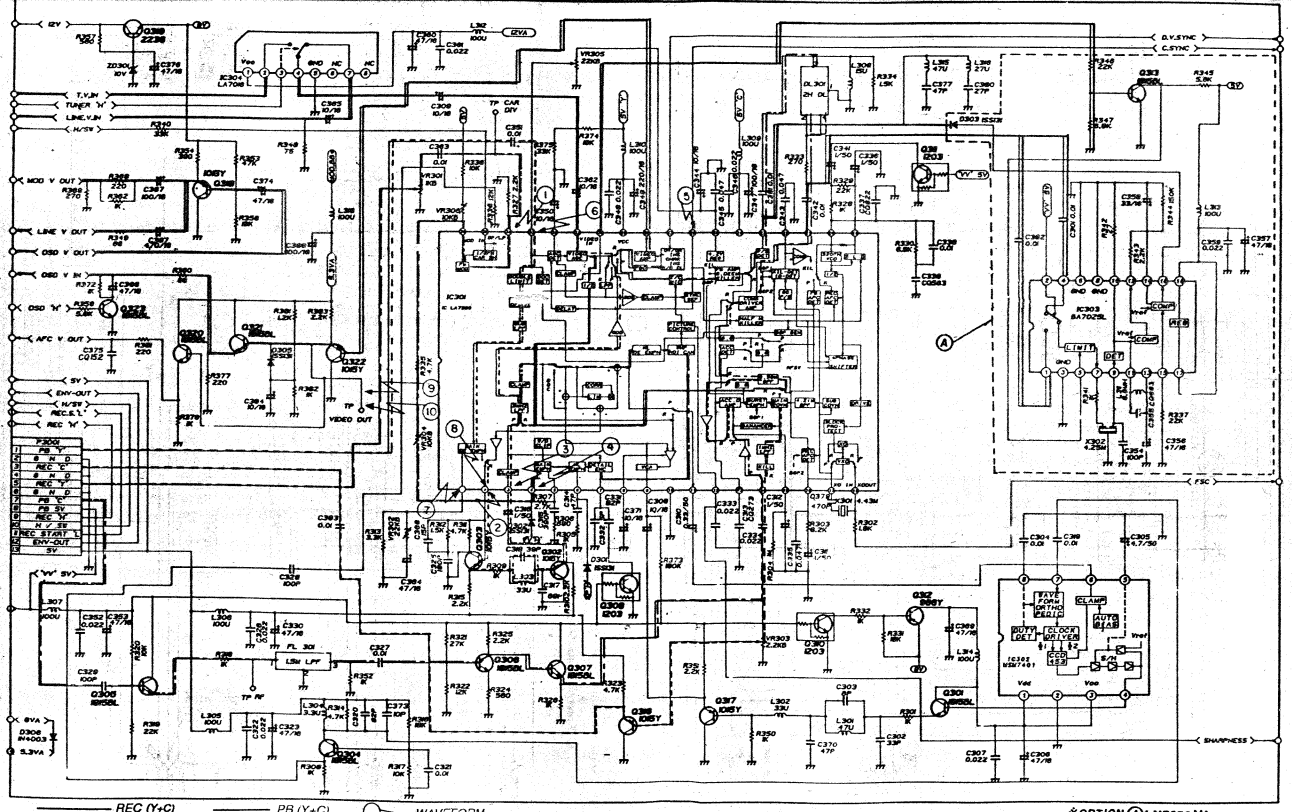
REC (Y+C)
PB (Y+C)
WAVEFORM
*OPTION (A): MESECAM

4. Audio Circuit Diagram

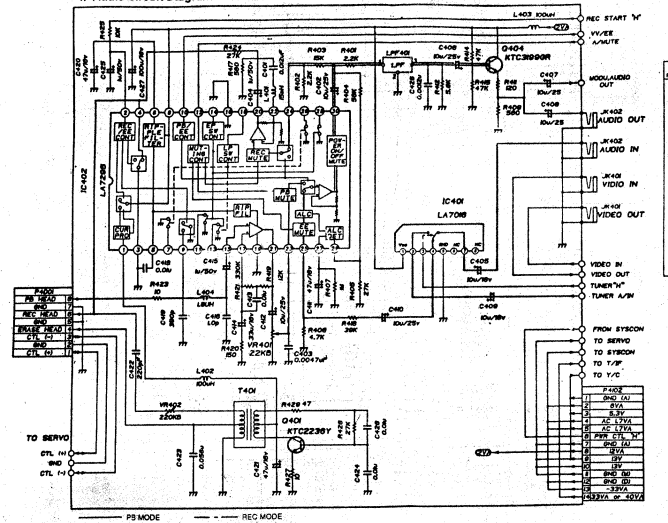

* Audio IC Voltage Sheet

Pin No.	IC401 REC	IC401 PB	IC402 REC	IC402 PB
1	12	12	12	0
2	8	8	8	330mV
3	5	200mV	0	0
4	0	0	0	0
5	0	0	0	0
6	0	0	0	0
7	0	0	0	0
8	0	0	0	12
9			0	12
10			0	12
11			0	0
12			2	0
13			2	0
14			2	0
15			2	0
16			2	0
17			0	0
18			3.8	0
19			2	0
20			2	0
21			0	0
22			0	4.5
23			0	4.5
24			0	12.5
25			0	0
26			0	0
27			0	0
28			0	0
29			0	120mV
30			4	0

SCART PIN SIGNAL NAME

3 3L AUDIO OUT
21 6L AUDIO IN
8L PS 12V
20L VIDEO IN
19L VIDEO OUT
4 17 20 GROUND

P402	
1	GND (A)
2	8VA
3	5.3V
4	AC 17VA
5	AC 17VA
6	PSN CTL (+)
7	GND (A)
8	12VA
9	12V
10	12V
11	GND (D)
12	GND (D)
13	-32VA
CASE	32VA or 40VA

6. Tuner/IF Circuit Diagram

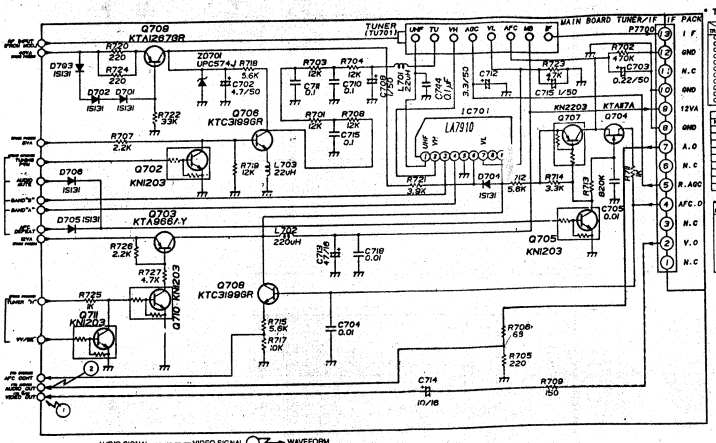

* Tuner/IF Voltage Sheet

Pin No.	R	L	C	B
	QX01	1.50	11.98	2.90
	QX02	0	5.42	0.43
	QX03	11.74	11.64	11.02
	QX04	5.80	5.52	5.80
	QX05	0	11.98	0
	QX06	4.3-4.5	4.22	4.3-4.5
	QX01	11.61	5.70	11.98
	QX02	5.71	11.65	5.70
	QX03	12.1	12.0	12.1
	QX04	4.97	5.03	4.71
	QX11	0	4.71	0

Pin No.	IC701/SAA7055 VOLTAGE	Pin No.	VOLTAGE
1	7.98	11	5.1
2	7.98	12	0
3	0	13	5
4	0	14	0.98
5	4.74	15	5.1
6	5.01	16	5.1
7	5.2	17	0.98
8	4.95	18	0.2

Pin No.	IC701 VOLTAGE
1	11.33V
2	11.33V
3	4.769
4	Osc Wa
5	0
6	11.33V
7	11.33V
8	0
9	11.33V
10	11.33V

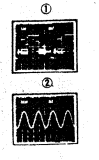

AUDIO SIGNAL — — — VIDEO SIGNAL ~ WAVEFORM

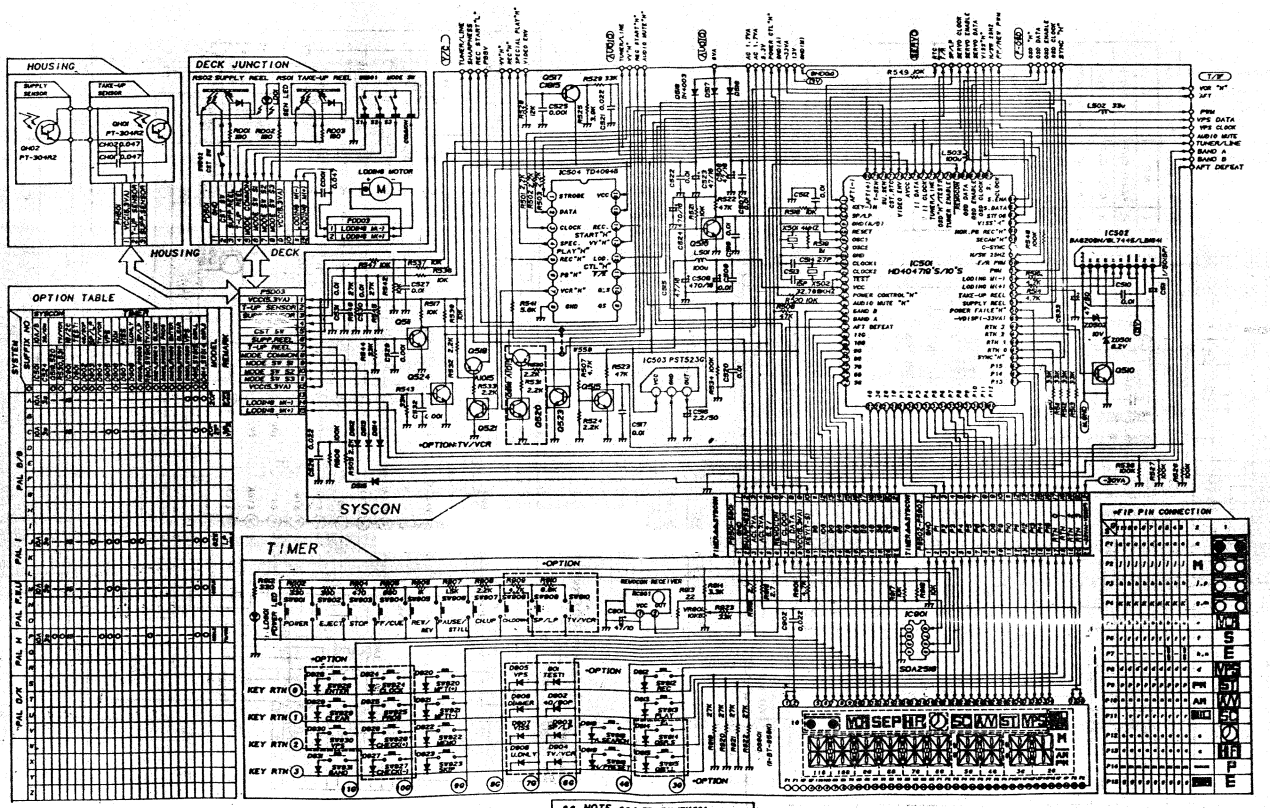
HOUSING
DECK JUNCTION
RS02 SUPPLY REEL
RS01 TAKE-UP REEL
LOADING MOTOR
HOUSING
DECK
OPTION TABLE
SYSCON
TIMER
IC504 TD6848
IC503 PST5230
IC502 HD404710'S/10'S
IC501 SDA2516
IC901
*OPTION:TV/VCR
*OPTION
KEY RTN 0
KEY RTN 1
KEY RTN 2
KEY RTN 3
*FIP PIN CONNECTION
VPS DATA
VPS CLOCK
AUDIO MUTE
TUNER/LINE
BAND A
BAND B
AFT DEFEAT

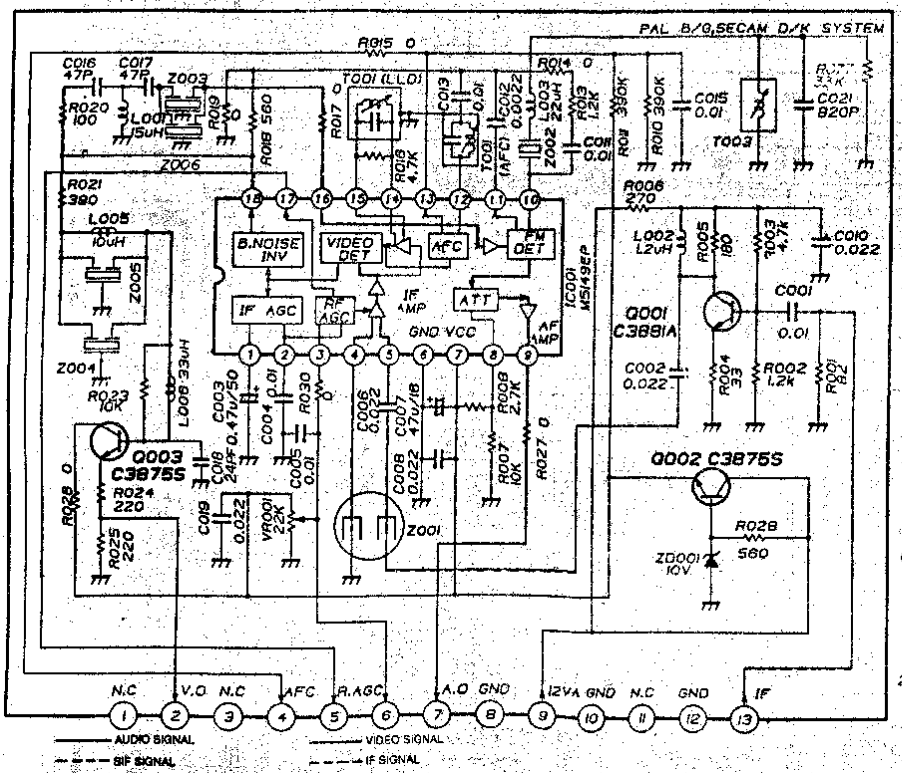

PIN NO	PIN NAME	IN - OUT SPEC.
1	N.C	
2	VIDEO OUT	1 +- 0.1Vp-p
3	VIDEO OUT	2 +- 0.2Vp-p
4	AFC OUT	4.5 +- 0.2V
5	RF AGE	0.- 8.0V
6	IF AGC OUT	EXT VR INSERT
7	AUDIO OUT	-5 +- 2dBm
8	G N D	-
9	VCC IN	12 +- 0.2V
10	G N D	-
11	N . C	-
12	N . C	-
13	IF IN	90+- 5dBm

(NOTES)
1.UNLESS OTHERWISE SPECIFIED
ALL RESISTORS ARE IN OHM,
ALL INDUCTORS ARE IN HENRY,
NO CHECKED CAPACITORS ARE u-FARAD
CHECKER CAPACITORS ARE IN FARAD.
2.CHIP PARTS IS THE R/C/TR SERISE.

A B C D E F G

3-81 3-82

* OSD IC Voltage Sheet

Mode / Pin No.	X801 REC	PB
1	0	0
2	22	22
3	26	26
4	0	0
5	50	50
6	0	0
7	0	0
8	0	0
9	44	44
10	48	48
11	51	51
12	16	16
13	0	0
14	16	16
15	51	51
16	43	43
17	21	21
18	50	50
19	45	45
20	23	23
21	23	23
22	51	51

P801	
AFC V IN	1
OSD CLK	2
OSD DATA	3
OSD CS	4
OSD 'H'	5
SYNC 'H'	6
OSD V IN	7
G N D	8
OSD V OUT	9
5.3VA	10

Mode / Pin No.	X801 REC	PB
1	0	0
2	22	22
3	34	34
4	45	45
5	45	45
6	0	0
7	5	5
8	52	52
9	45	45
10	41	41
11	26	26
12	22	22
13	52	52
14	0	0

8. Function OSD Circuit Diagram

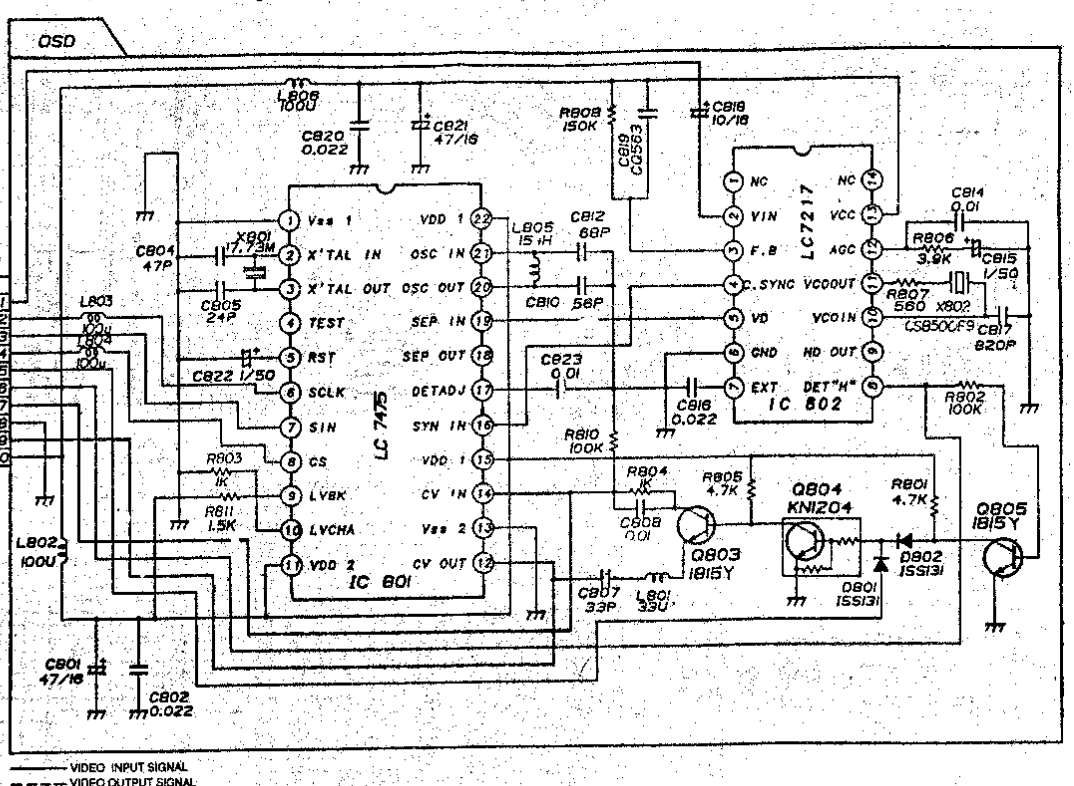

10. Connection Diagram

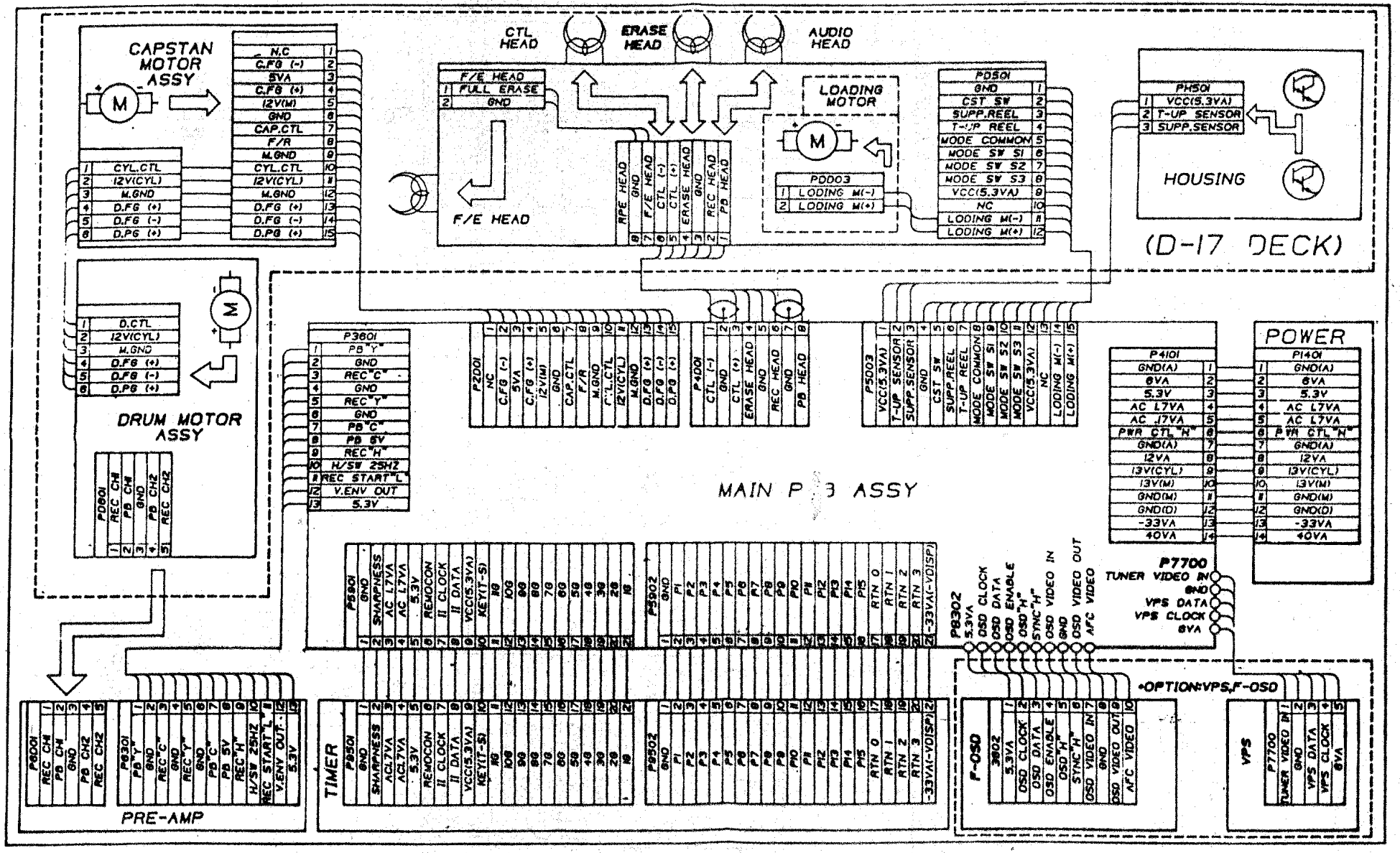

9. Pre-Amp Circuit Diagram

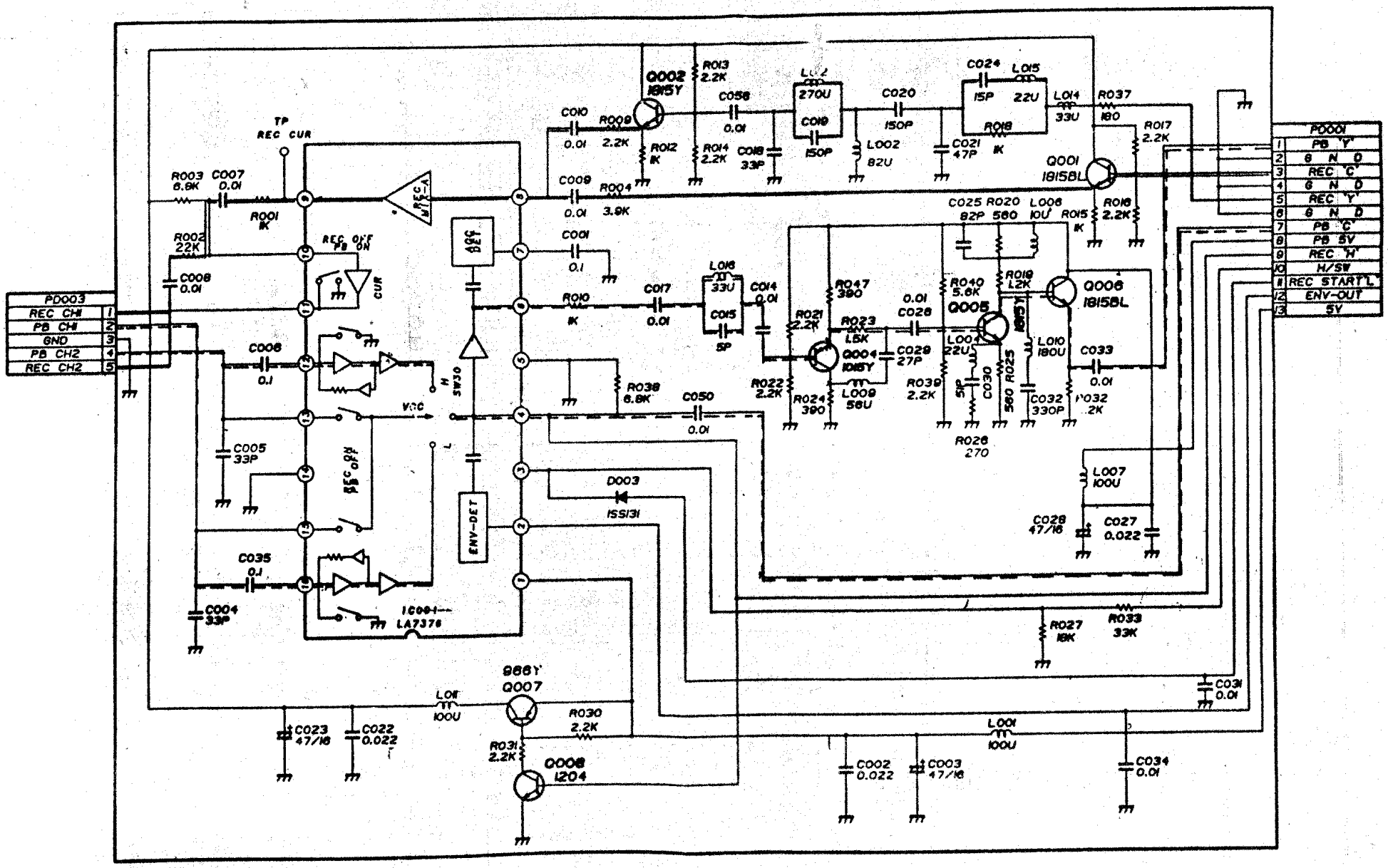

REC C/REC Y SIGNAL

PB Y SIGNAL