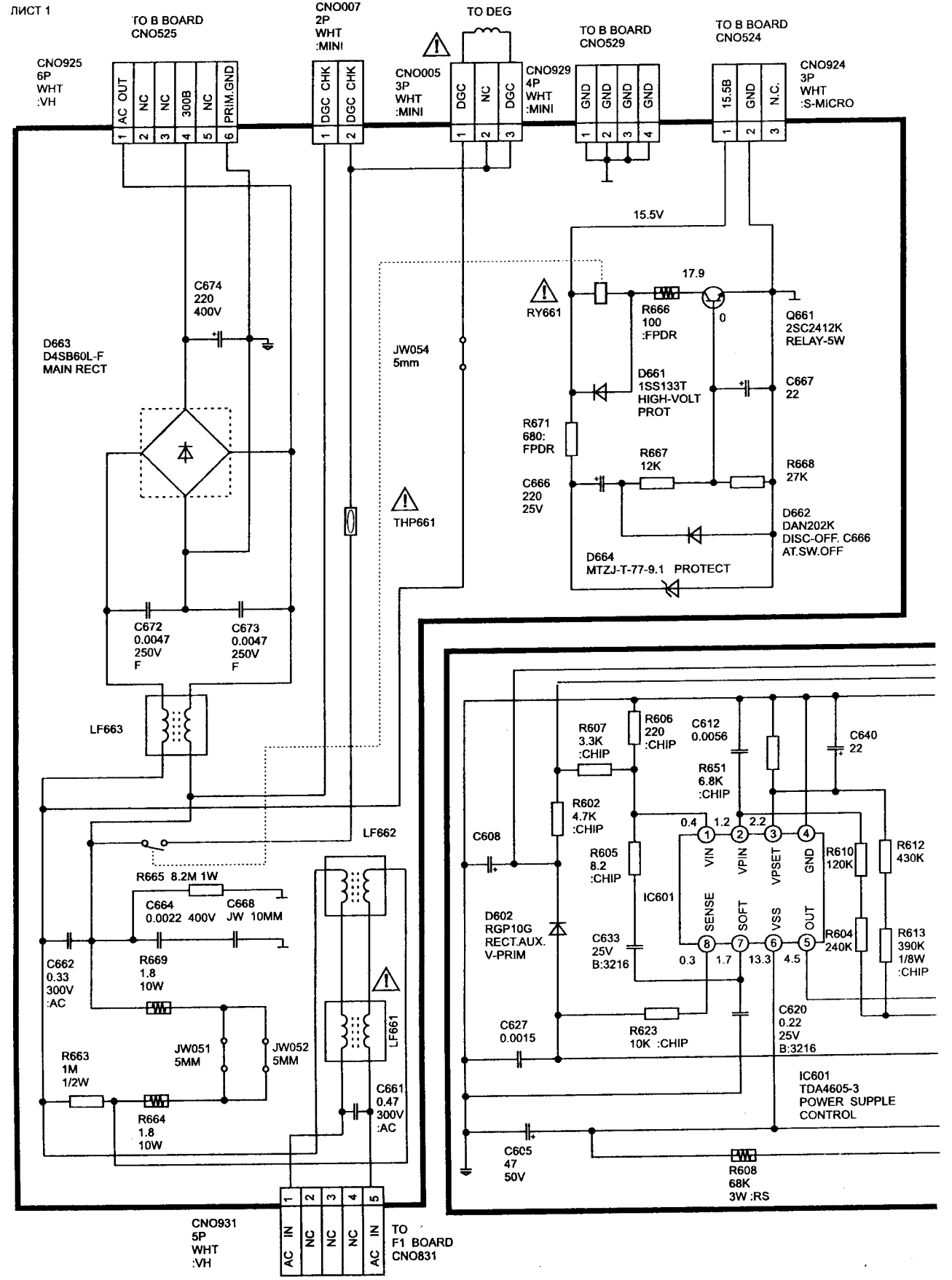
ЛИСТ 1
TO B BOARD
CNO525
CNO007
2P
WHT
:MINI
TO DEG
TO B BOARD
CNO529
TO B BOARD
CNO524
CNO925
6P
WHT
:VH
AC OUT
NC
NC
300B
NC
PRIM.GND
DGC CHK
DGC CHK
CNO005
3P
WHT
:MINI
DGC
NC
DGC
CNO929
4P
WHT
:MINI
GND
GND
GND
GND
15.5B
GND
N.C.
CNO924
3P
WHT
:S-MICRO
15.5V
17.9
RY661
R666
100
:FPDR
0
Q661
2SC2412K
RELAY-5W
C674
220
400V
D663
D4SB60L-F
MAIN RECT
JW054
5mm
D661
1SS133T
HIGH-VOLT
PROT
C667
22
R671
680:
FPDR
R667
12K
R668
27K
C666
220
25V
THP661
D662
DAN202K
DISC-OFF. C666
AT.SW.OFF
D664
MTZJ-T-77-9.1 PROTECT
C672
0.0047
250V
F
C673
0.0047
250V
F
LF663
LF662
R607
3.3K
:CHIP
R606
220
:CHIP
C612
0.0056
C640
22
R651
6.8K
:CHIP
R602
4.7K
:CHIP
C608
R605
8.2
:CHIP
IC601
VIN
VPIN
VPSET
GND
SENSE
SOFT
VSS
OUT
R610
120K
R612
430K
R604
240K
R613
390K
1/8W
:CHIP
D602
RGP10G
RECT.AUX.
V-PRIM
C633
25V
B:3216
R665 8.2M 1W
C664
0.0022 400V
C668
JW 10MM
C662
0.33
300V
:AC
R669
1.8
10W
LF661
C627
0.0015
R623
10K :CHIP
C620
0.22
25V
B:3216
R663
1M
1/2W
JW051
5MM
JW052
5MM
R664
1.8
10W
C661
0.47
300V
:AC
IC601
TDA4605-3
POWER SUPPLE
CONTROL
C605
47
50V
R608
68K
3W :RS
CNO931
5P
WHT
:VH
AC IN
NC
NC
NC
AC IN
TO
F1 BOARD
CNO831

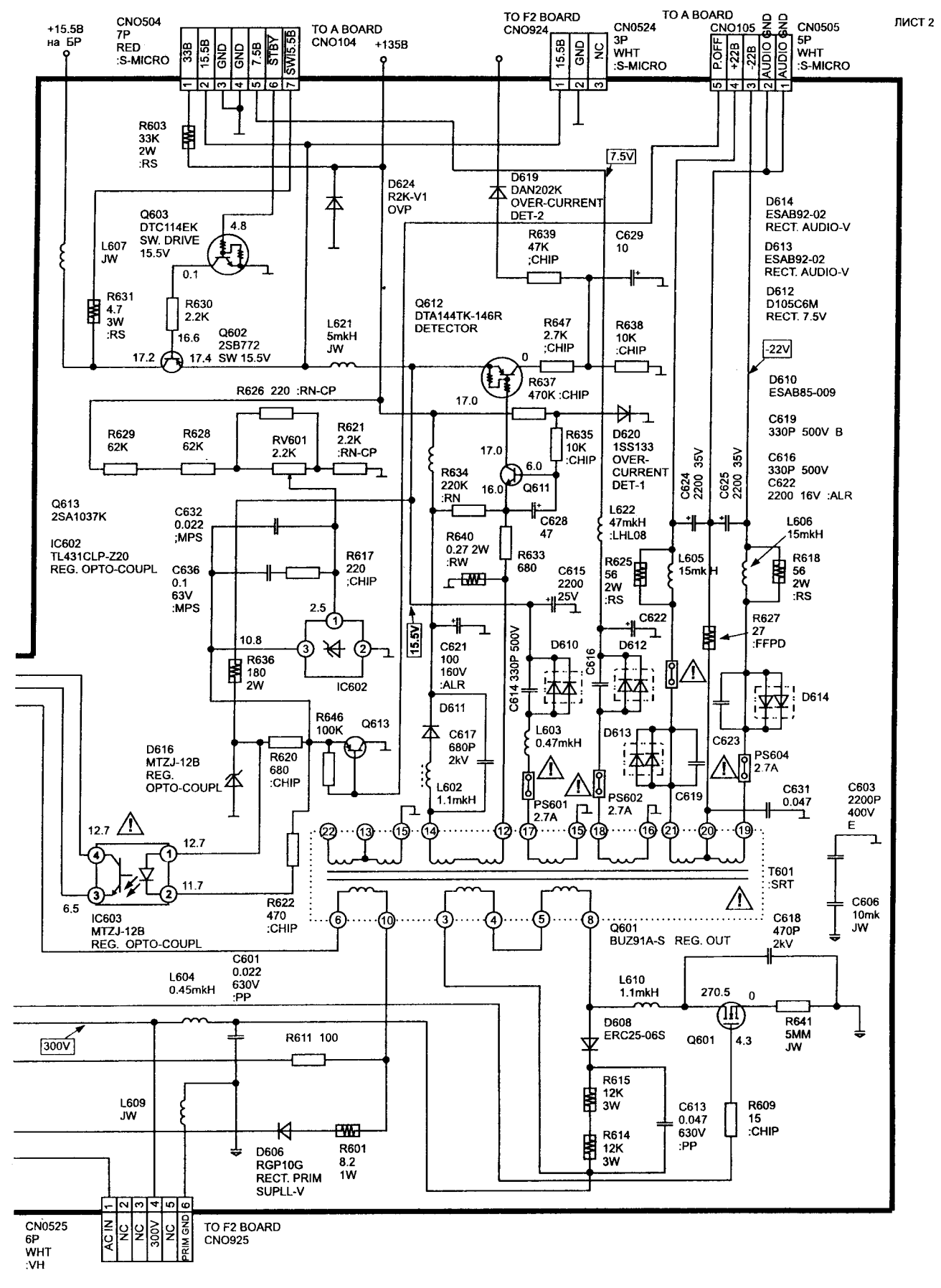
ЛИСТ 2
+15.5В на БР
CN0504 7P RED :S-MICRO
33В 15.5В GND GND 7.5В STBY SW/5.5В
TO A BOARD CNO104
+135В
TO F2 BOARD CNO924
15.5В GND NC
CN0524 3P WHT :S-MICRO
TO A BOARD CNO105
P.OFF +22В -22В AUDIO GND AUDIO GND
CN0505 5P WHT :S-MICRO
R603 33K 2W :RS
7.5V
D624 R2K-V1 OVP
D619 DAN202K OVER-CURRENT DET-2
D614 ESAB92-02 RECT. AUDIO-V
D613 ESAB92-02 RECT. AUDIO-V
D612 D105C6M RECT. 7.5V
Q603 DTC114EK SW. DRIVE 15.5V
4.8
0.1
L607 JW
R631 4.7 3W :RS
R630 2.2K
16.6
Q602 2SB772 SW 15.5V
17.2
17.4
L621 5mkH JW
Q612 DTA144TK-146R DETECTOR
R639 47K ;CHIP
C629 10
R647 2.7K ;CHIP
R638 10K :CHIP
0
R637 470K :CHIP
-22V
D610 ESAB85-009
R626 220 :RN-CP
17.0
R629 62K
R628 62K
RV601 2.2K
R621 2.2K :RN-CP
R635 10K :CHIP
D620 1SS133 OVER-CURRENT DET-1
C619 330P 500V B
C616 330P 500V
C622 2200 16V :ALR
C624 2200 35V
C625 2200 35V
6.0
16.0
Q611
R634 220K :RN
C628 47
Q613 2SA1037K
C632 0.022 ;MPS
IC602 TL431CLP-Z20 REG. OPTO-COUPL
C636 0.1 63V :MPS
R617 220 ;CHIP
R640 0.27 2W :RW
R633 680
C615 2200 25V
L622 47mkH :LHL08
L606 15mkH
R625 56 2W :RS
L605 15mkH
R618 56 2W :RS
R627 27 :FFPD
2.5
10.8
R636 180 2W
IC602
15.5V
C621 100 160V :ALR
C614 330P 500V
C616
C622
D610
D612
D614
D611
C617 680P 2kV
L603 0.47mkH
D613
C623
PS604 2.7A
D616 MTZJ-12B REG. OPTO-COUPL
R620 680 :CHIP
R646 100K
Q613
L602 1.1mkH
PS601 2.7A
PS602 2.7A
C619
C631 0.047
C603 2200P 400V E
12.7
12.7
11.7
6.5
IC603 MTZJ-12B REG. OPTO-COUPL
R622 470 :CHIP
T601 :SRT
C606 10mk JW
C618 470P 2kV
Q601 BUZ91A-S REG. OUT
C601 0.022 630V :PP
L604 0.45mkH
L610 1.1mkH
270.5
0
D608 ERC25-06S
Q601
4.3
R641 5MM JW
300V
R611 100
R615 12K 3W
C613 0.047 630V :PP
R609 15 :CHIP
L609 JW
R614 12K 3W
D606 RGP10G RECT. PRIM SUPLL-V
R601 8.2 1W
CN0525 6P WHT :VH
AC IN NC NC 300V NC PRIM GND
TO F2 BOARD CNO925