11. Schematic Diagrams

		Page
◆ Block Identification of Main PCB		11-2
11-1	S.M.P.S/Power	11-3
11-2	System Control/Servo	11-4
11-3	Pre-Amp	11-5
11-4	Audio/Video	11-6
11-5	Hi-Fi	11-7
11-6	SECAM (SV-717F/617F Only)	11-8
11-7	IF (SV-717F/617F Only)	11-9
11-8	IF	11-10
11-9	VPS/PDC	11-11
11-10	SUB (A2)	11-12
11-11	SUB (A2/NICAM) ; SV-717F/617F Only	11-13
11-12	SUB (A2/NICAM)	11-14
11-13	I/O (RCA)	11-15
11-14	I/O (1 SCART)	11-16
11-15	I/O (2 SCART)	11-17
11-16	Function-Timer (SV-717X/715X/700XK/717F/717B/B160B/SVR-715)	11-18
11-17	Function-Timer (SV-617X/615X/617F/617B/615B/615G/B140G/SVR-615)	11-19
11-18	Remote-Control (Shuttle)	11-20
11-19	Remote-Control (Without Shuttle)	11-21

Note

For schematic Diagram
- Resistors are in ohms, 1/8W unless otherwise noted.

Special note :
Most semiconductor devices are electrostatically sensitive and therefore require the special handling techniques described under the “electrostatically sensitive (ES) devices” section of this service manual.

Note :
Do not use the part number shown on this drawing for ordering. The correct part number is shown in the parts list (may be slightly different or amended since this drawing was prepared).

Important safety notices :
Components identified with the mark ⚠ have the special characteristics for safety. When replacing any of these components. Use only the same type.

◆ Block Identification of Main PCB

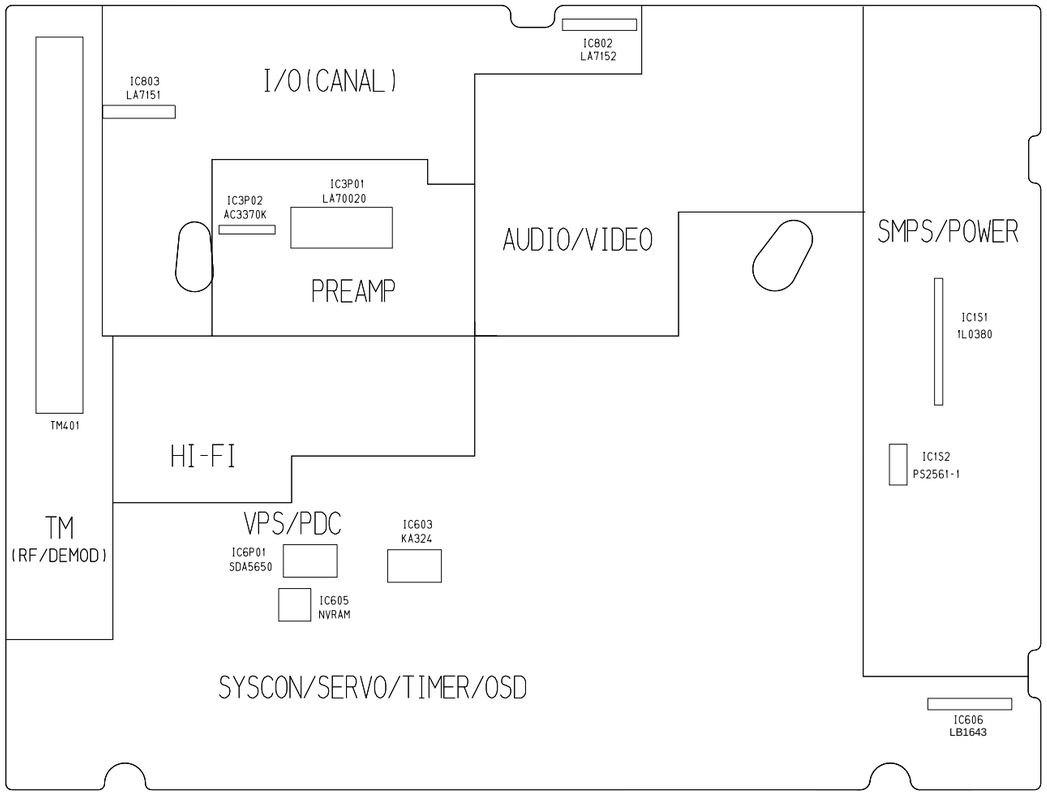

(Component Side)

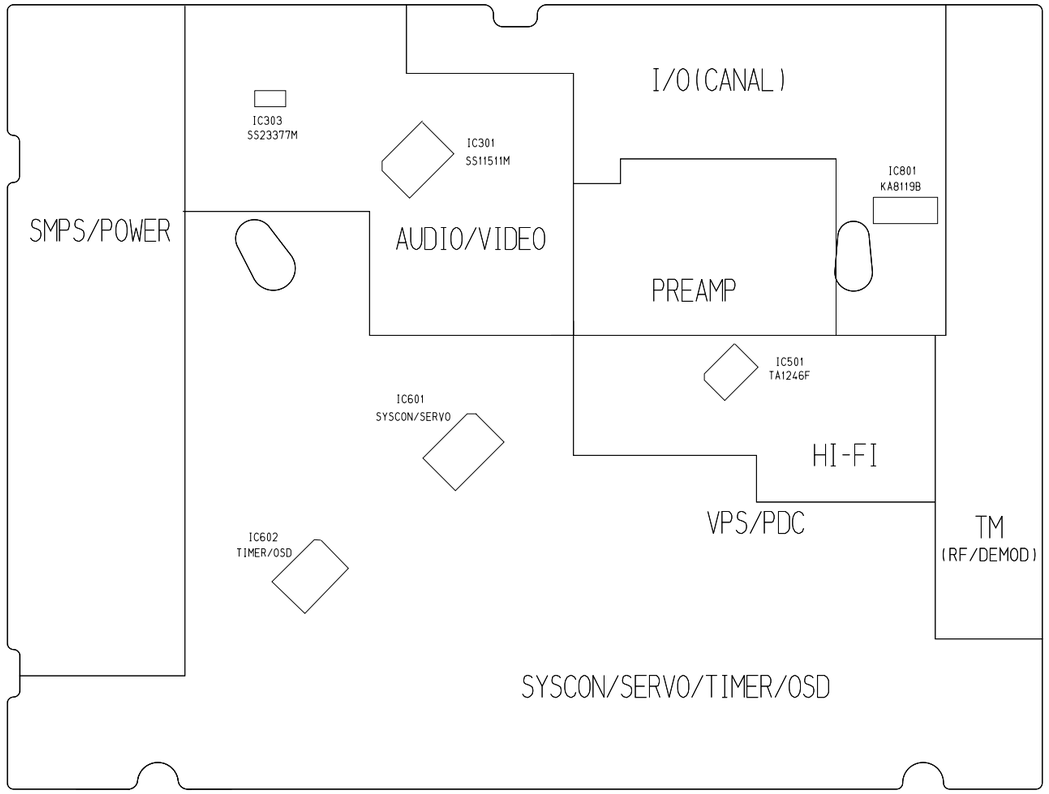

(Conductor Side)

11-1 S.M.P.S/POWER

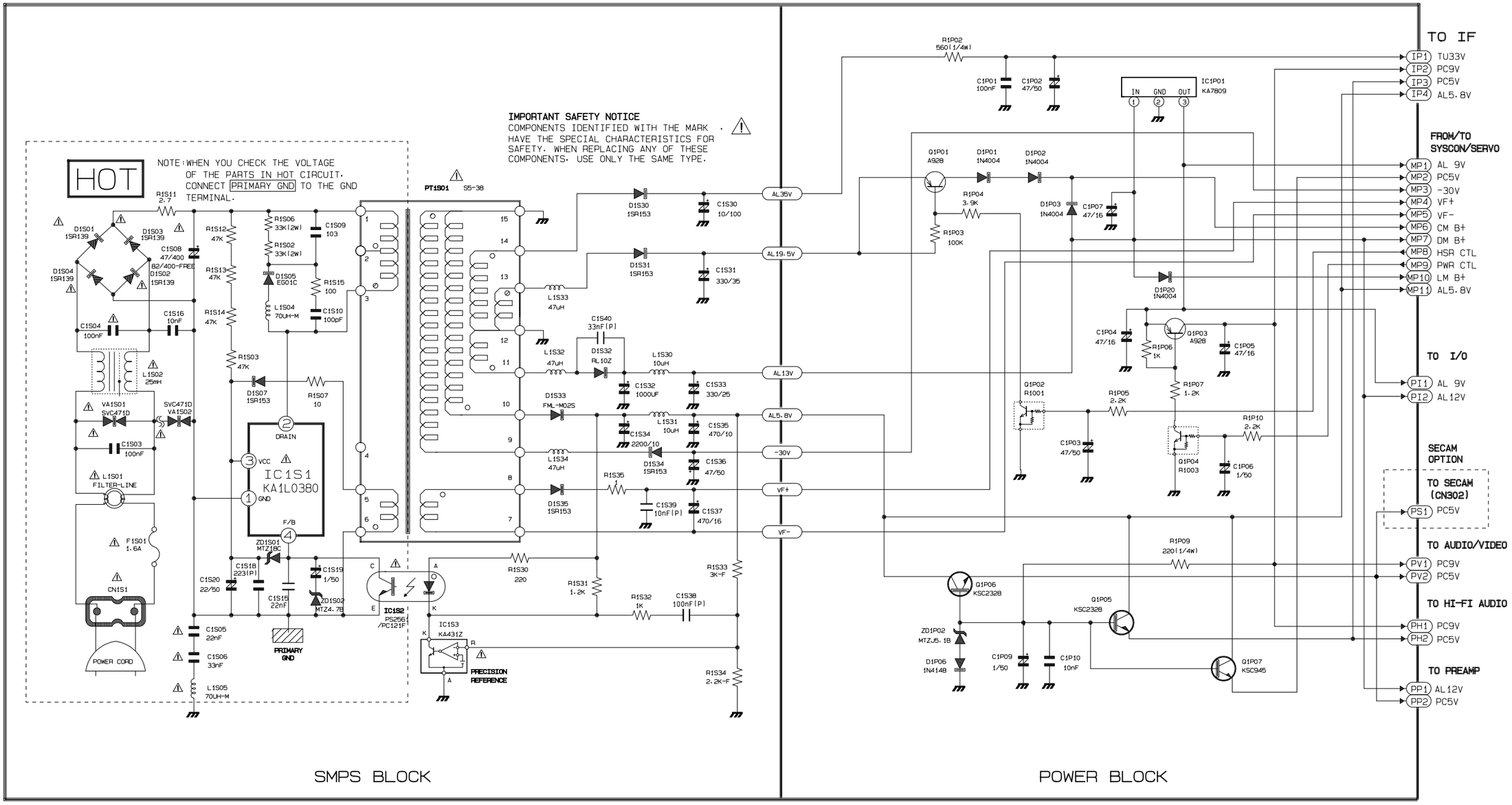

11-2 System Control/Servo

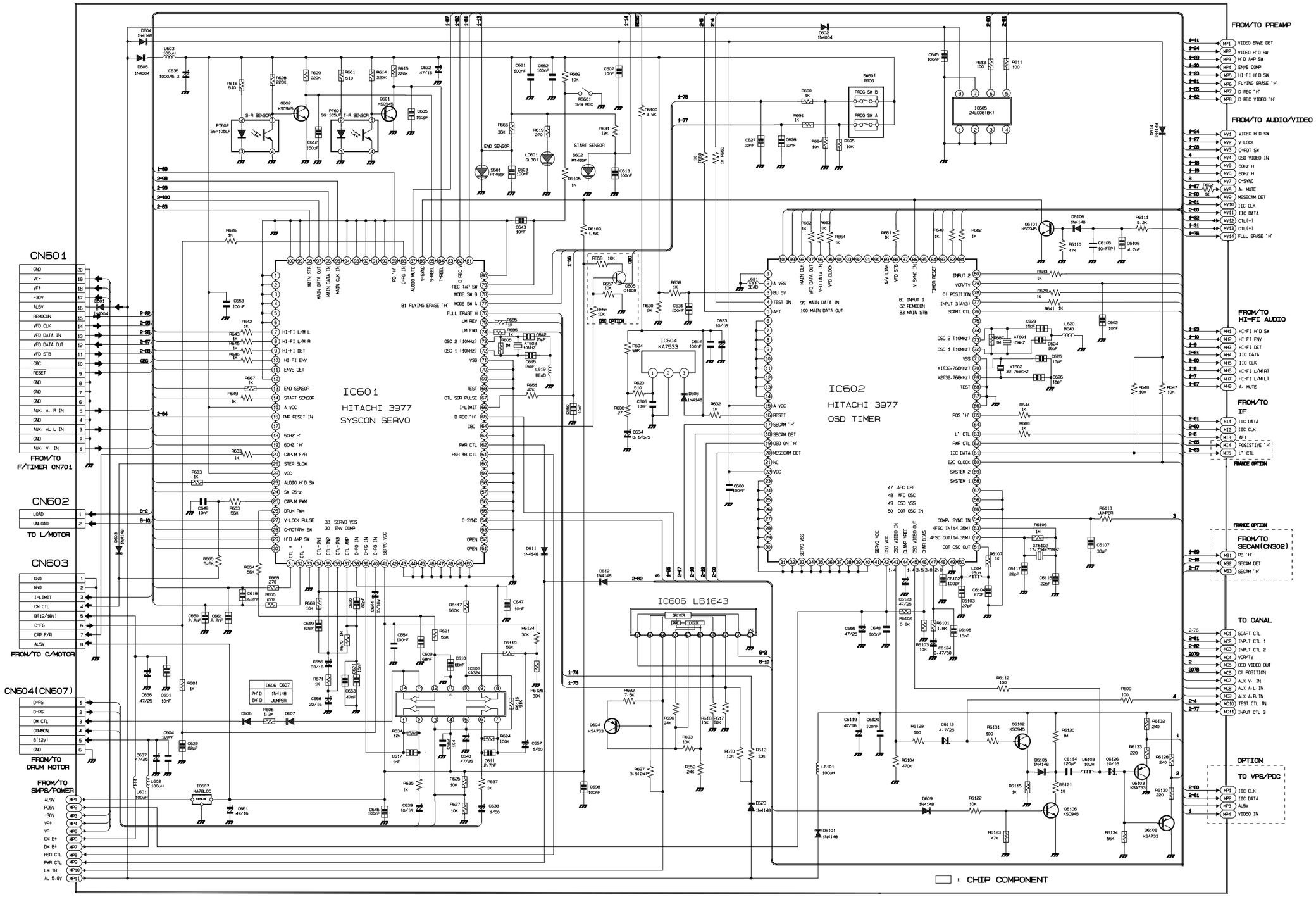

11-3 Pre-Amp

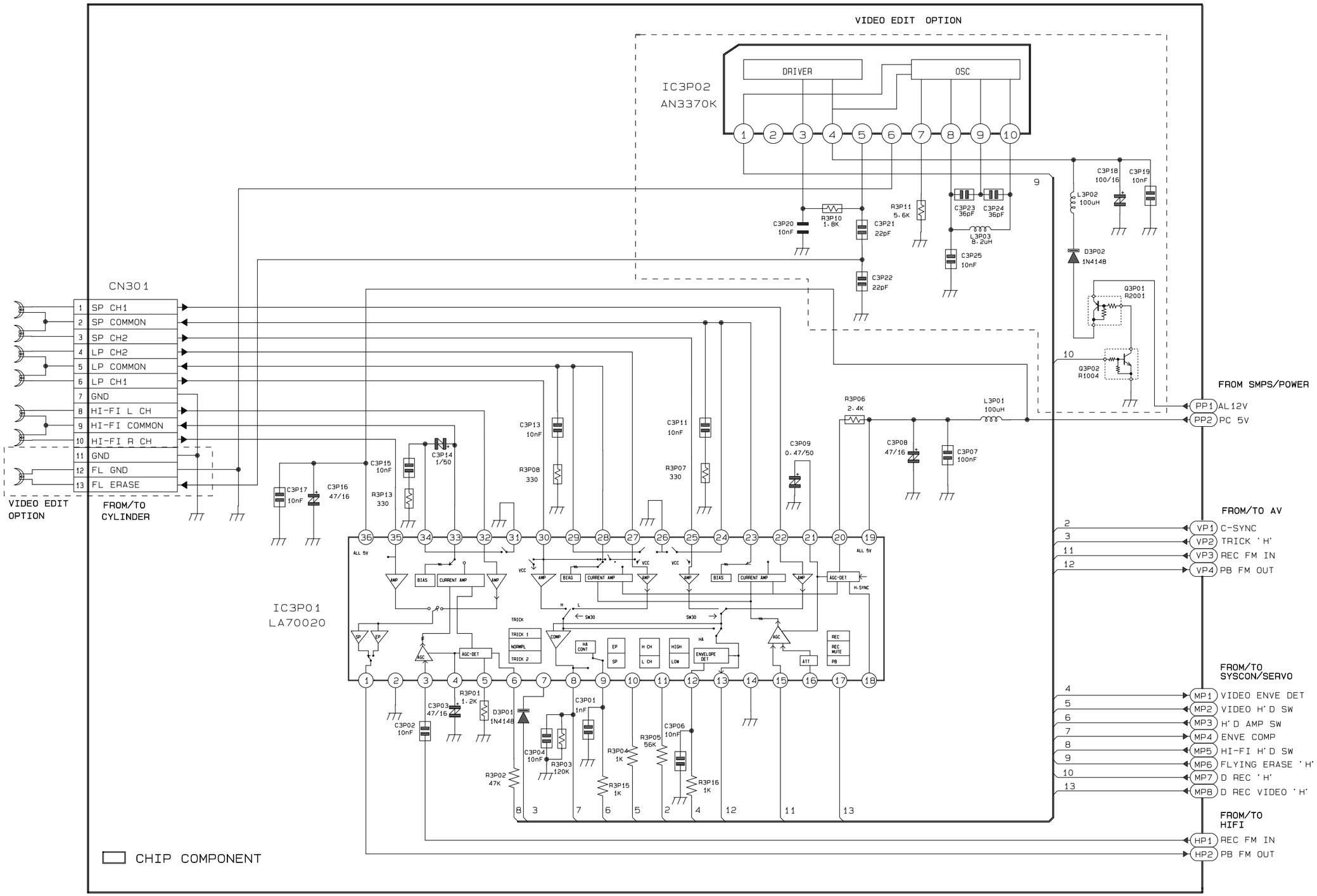
VIDEO EDIT OPTION
IC3P02
AN3370K
DRIVER
OSC
CN301
SP CH1
SP COMMON
SP CH2
LP CH2
LP COMMON
LP CH1
GND
HI-FI L CH
HI-FI COMMON
HI-FI R CH
GND
FL GND
FL ERASE
VIDEO EDIT OPTION
FROM/TO CYLINDER
IC3P01
LA70020
FROM SMPS/POWER
AL12V
PC 5V
FROM/TO AV
C-SYNC
TRICK 'H'
REC FM IN
PB FM OUT
FROM/TO SYSCON/SERVO
VIDEO ENVE DET
VIDEO H'D SW
H'D AMP SW
ENVE COMP
HI-FI H'D SW
FLYING ERASE 'H'
D REC 'H'
D REC VIDEO 'H'
FROM/TO HIFI
REC FM IN
PB FM OUT
CHIP COMPONENT

11-4 Audio/Video

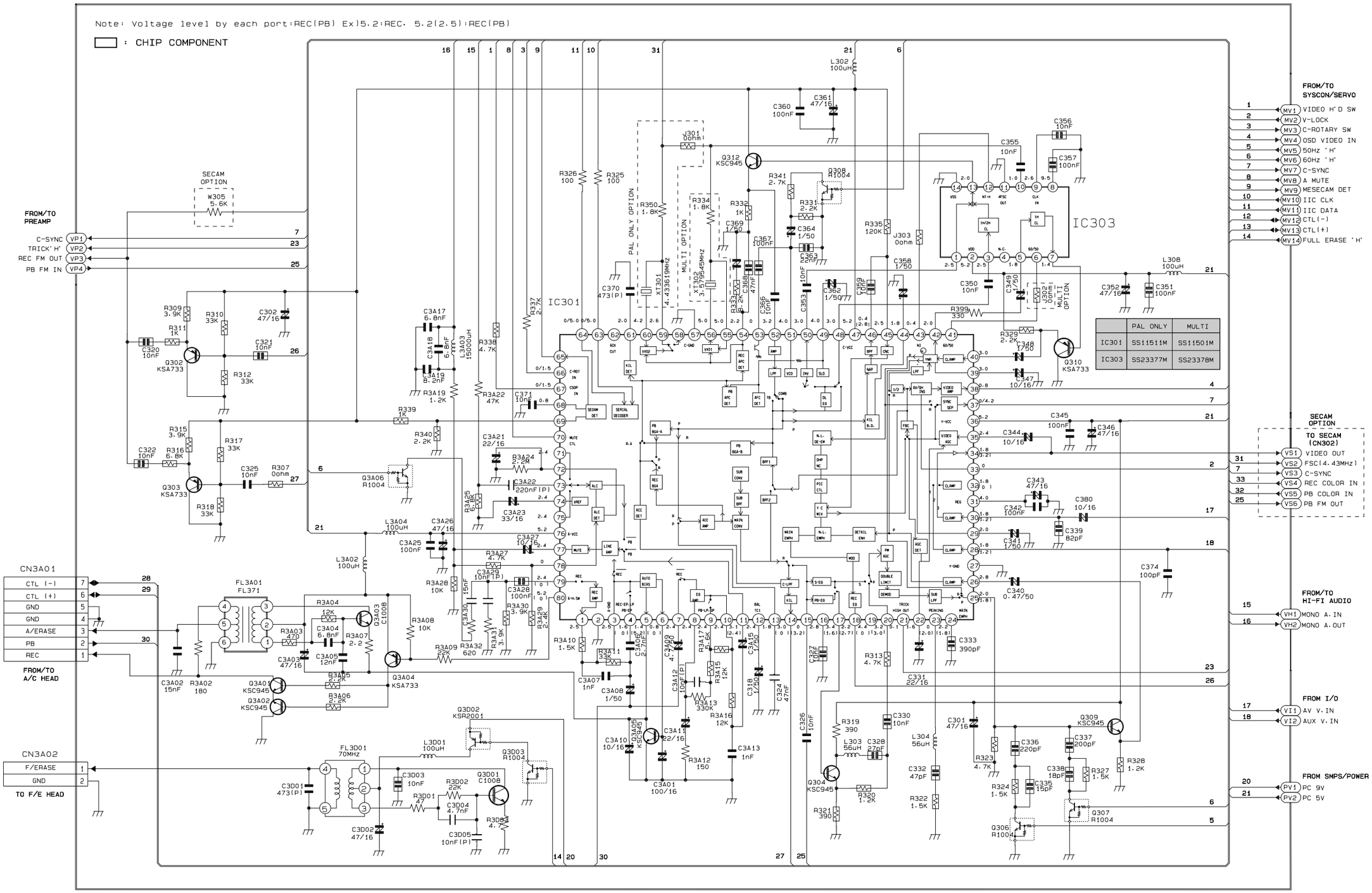

11-5 Hi-Fi

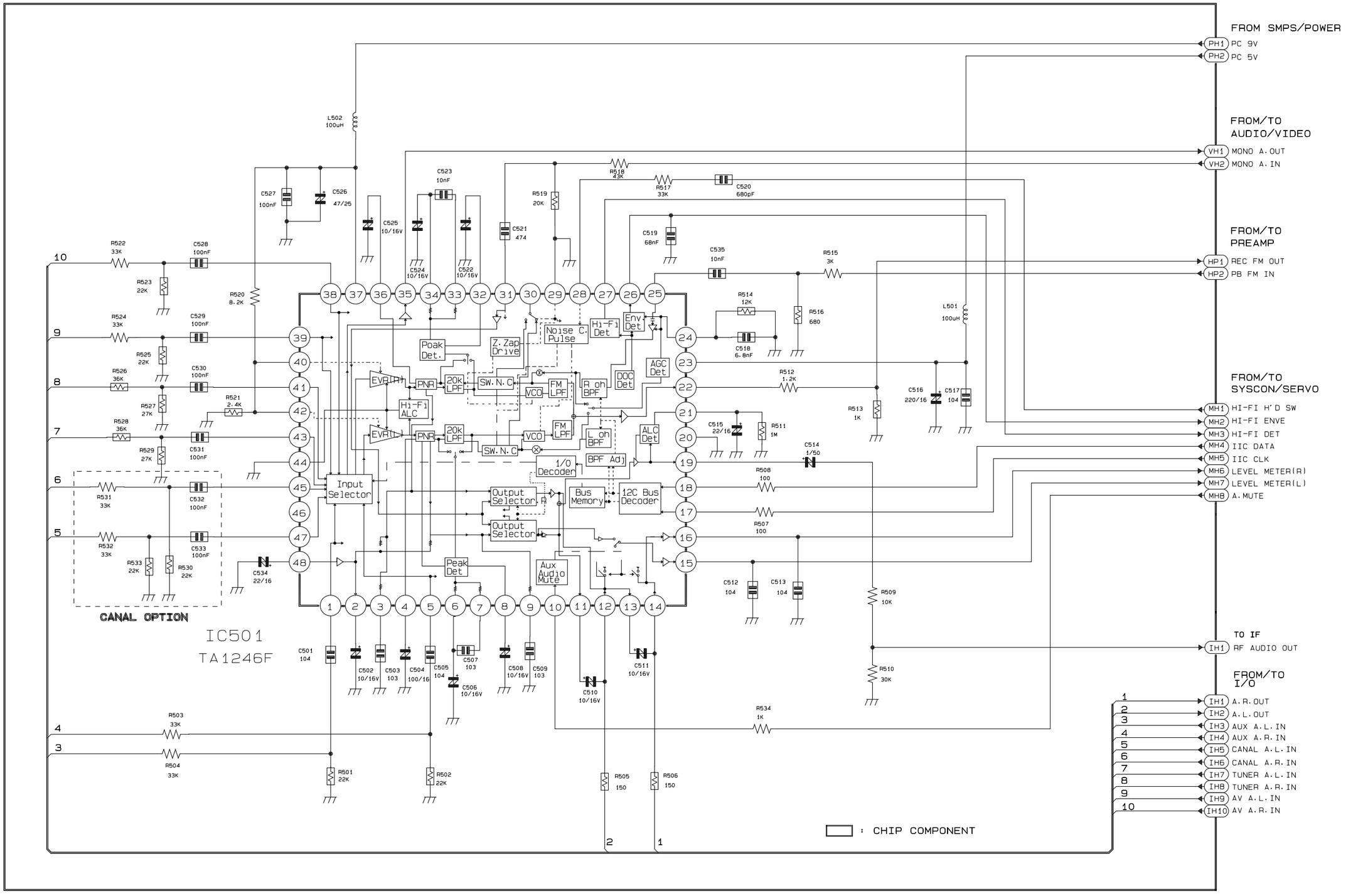
FROM SMPS/POWER
PH1 PC 9V
PH2 PC 5V
FROM/TO AUDIO/VIDEO
VH1 MONO A.OUT
VH2 MONO A.IN
FROM/TO PREAMP
HP1 REC FM OUT
HP2 PB FM IN
FROM/TO SYSCON/SERVO
MH1 HI-FI H'D SW
MH2 HI-FI ENVE
MH3 HI-FI DET
MH4 IIC DATA
MH5 IIC CLK
MH6 LEVEL METER(R)
MH7 LEVEL METER(L)
MH8 A.MUTE
TO IF
IH1 RF AUDIO OUT
FROM/TO I/O
IH1 A.R.OUT
IH2 A.L.OUT
IH3 AUX A.L.IN
IH4 AUX A.R.IN
IH5 CANAL A.L.IN
IH6 CANAL A.R.IN
IH7 TUNER A.L.IN
IH8 TUNER A.R.IN
IH9 AV A.L.IN
IH10 AV A.R.IN
CANAL OPTION
IC501
TA1246F
Input Selector
Output Selector
Output Selector
Bus Memory
12C Bus Decoder
1/O Decoder
BPF Adj
Noise C. Pulse
Hi-Fi Det
Env Det
Poak Det.
Z.Zap Drive
AGC Det
DOC Det
ALC Det
Hi-Fi ALC
EVR(H)
EVR(L)
PNR
20k LPF
SW.N.C
VCO
FM LPF
R ch BPF
L ch BPF
Peak Det
Aux Audio Mute
: CHIP COMPONENT

11-6 SECAM (SV-717F/617F Only)

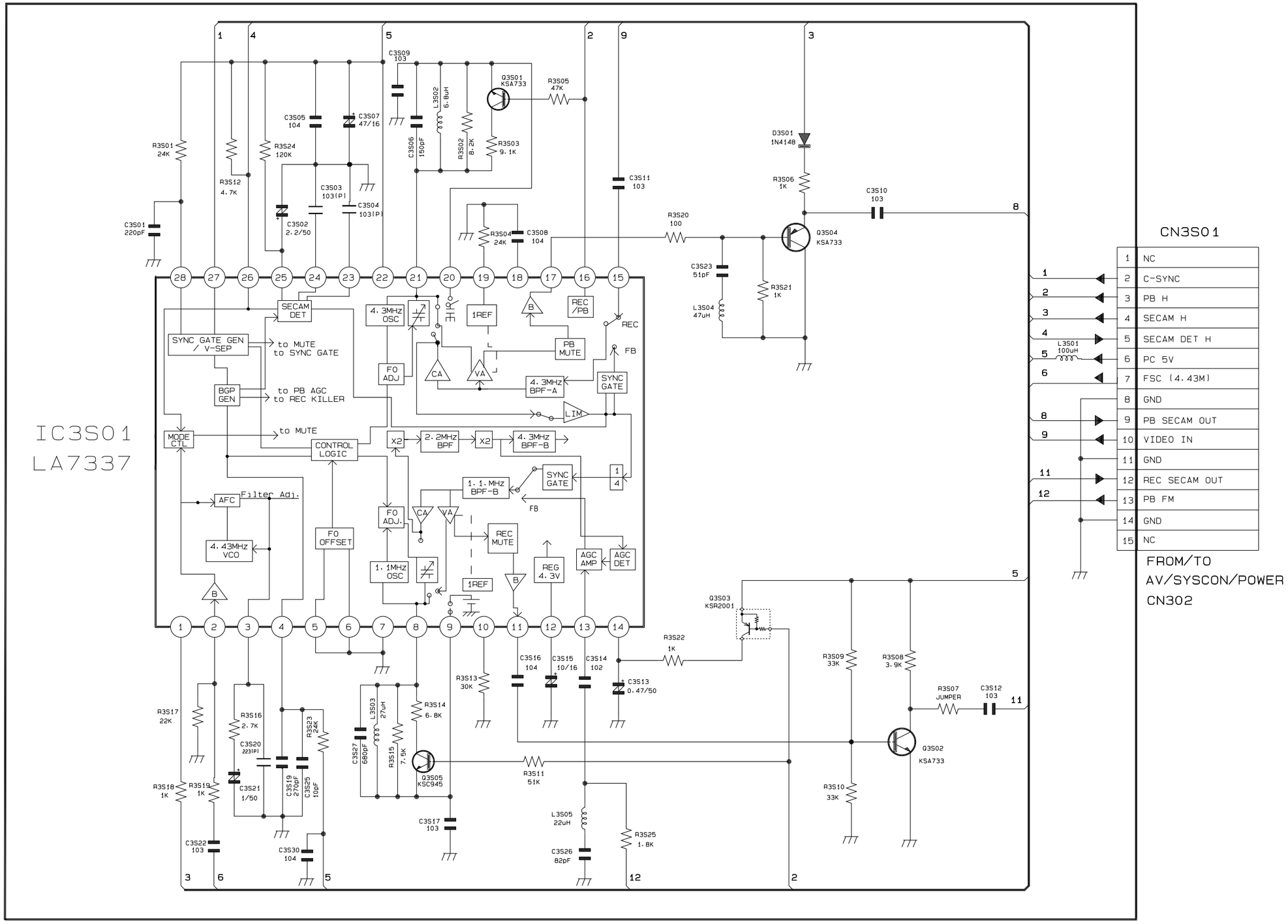

11-7 IF (SV-717F/617F Only)

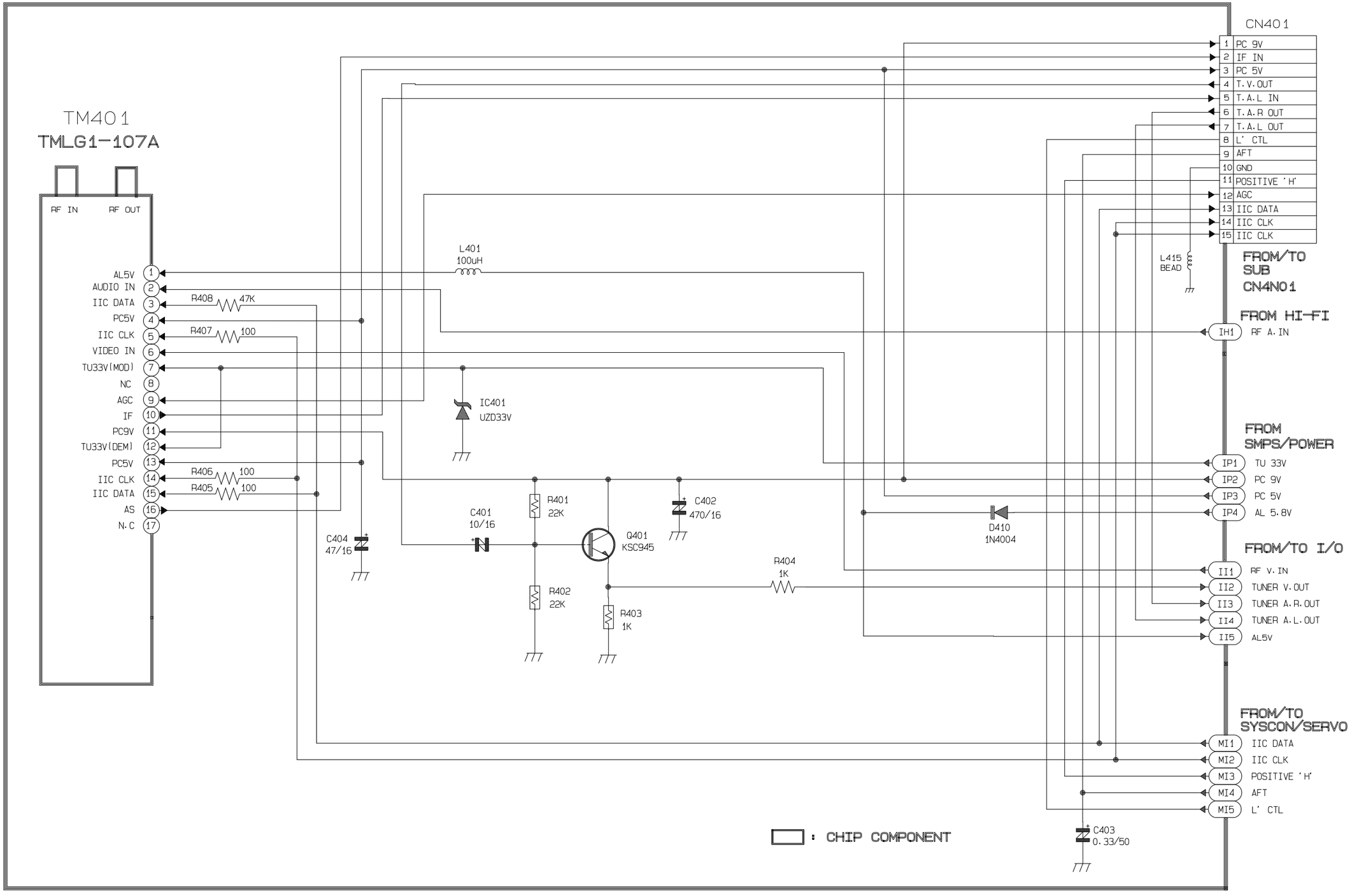

11-8 IF

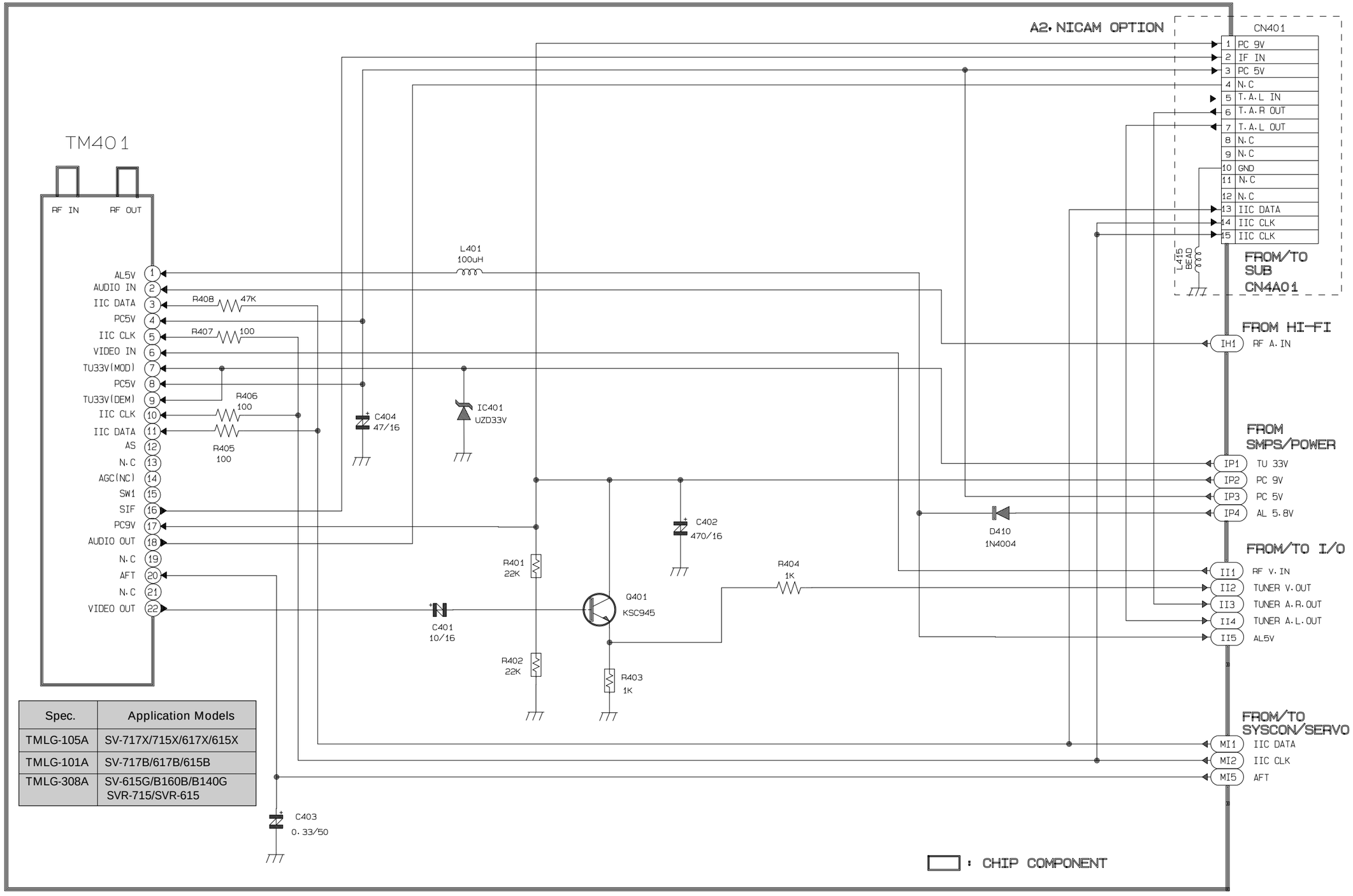

Spec.	Application Models
TMLG-105A	SV-717X/715X/617X/615X
TMLG-101A	SV-717B/617B/615B
TMLG-308A	SV-615G/B160B/B140G SVR-715/SVR-615

11-9 VPS/PDC

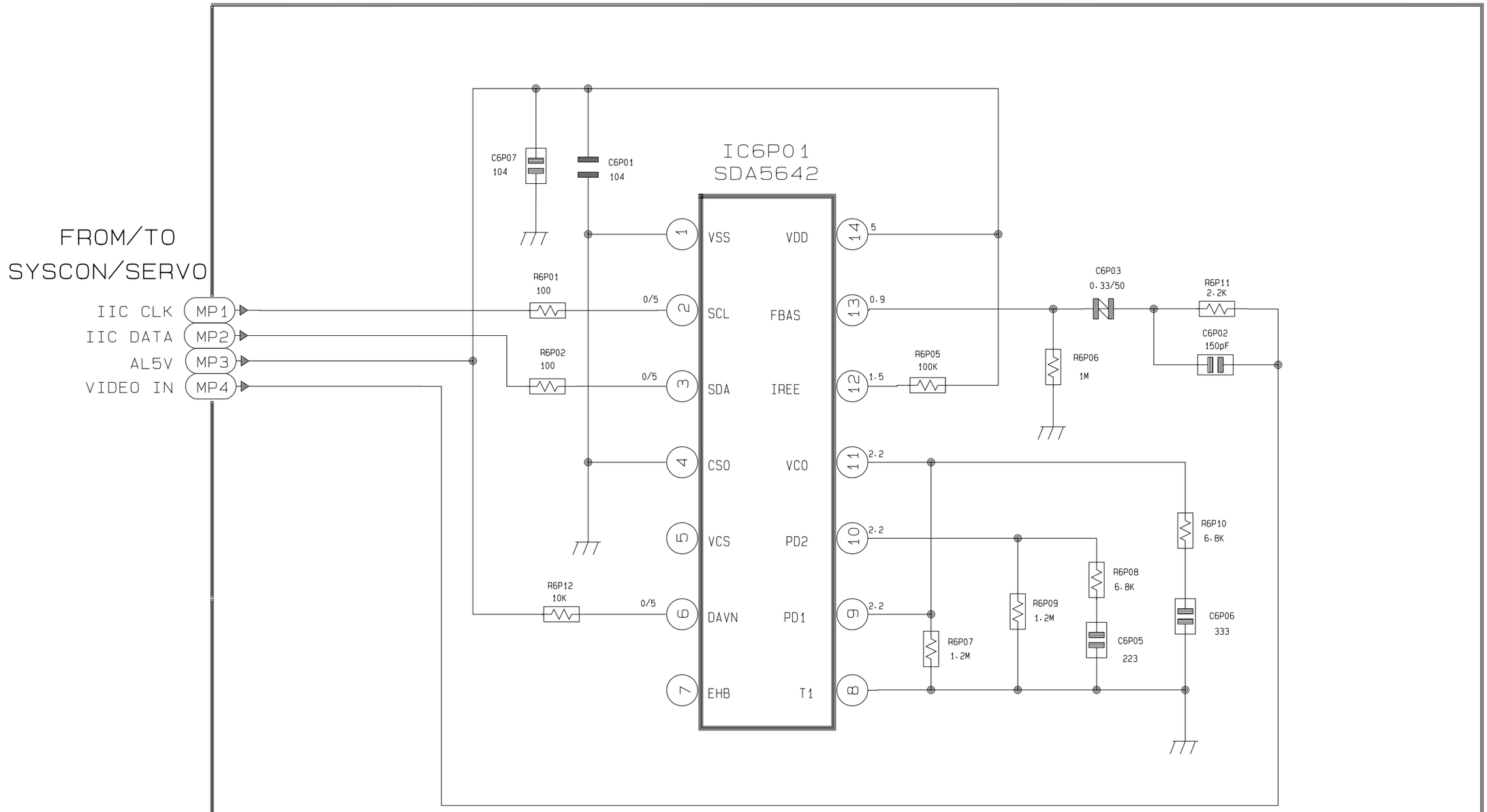

: CHIP COMPONENT

Note: Voltage level by each port:REC(PB) Ex)5.2:REC, 5.2(2.5):REC(PB)

11-10 SUB (A2)

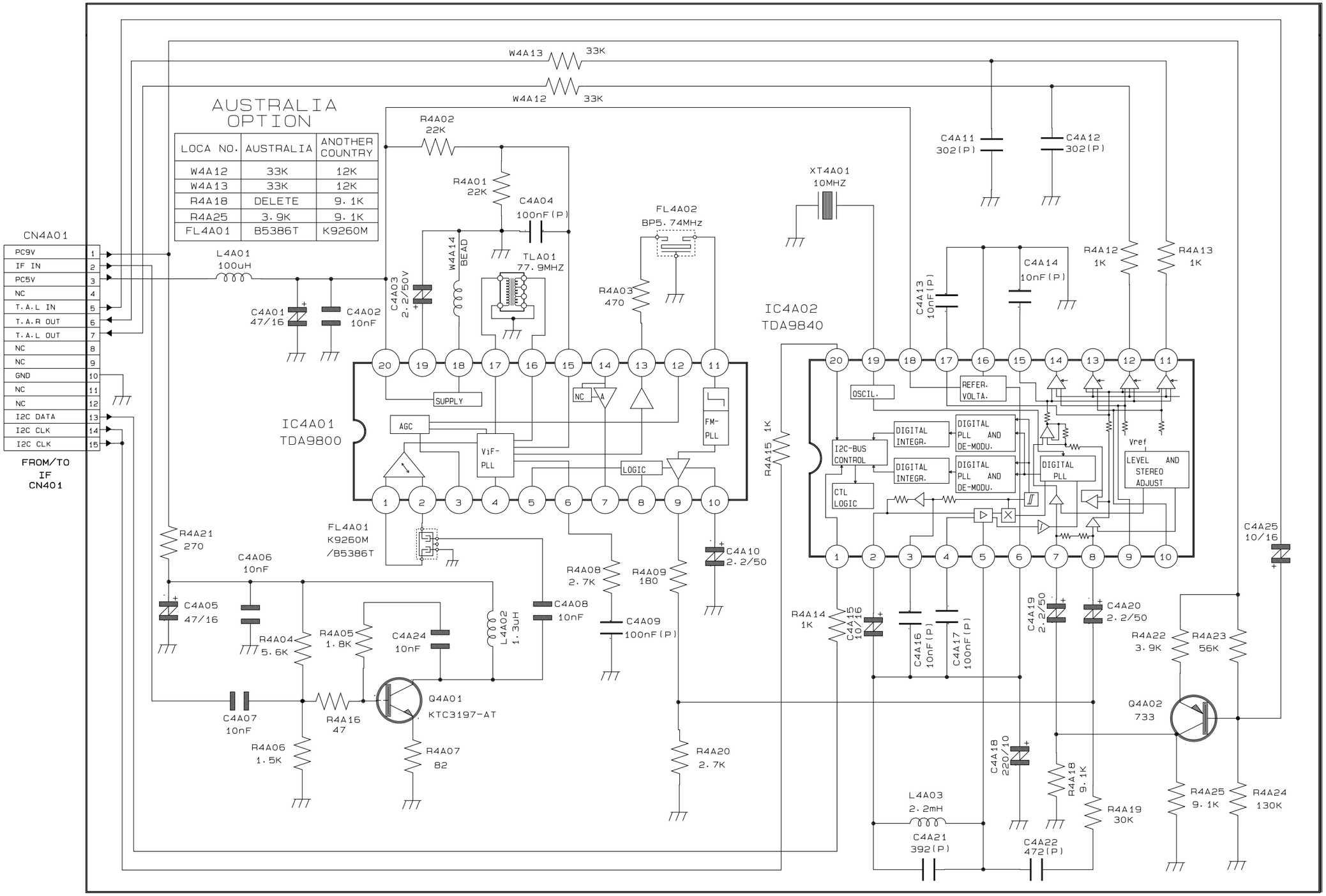
AUSTRALIA OPTION
LOCA NO. | AUSTRALIA | ANOTHER COUNTRY
W4A12 | 33K | 12K
W4A13 | 33K | 12K
R4A18 | DELETE | 9.1K
R4A25 | 3.9K | 9.1K
FL4A01 | B5386T | K9260M
CN4A01
PC9V
IF IN
PC5V
NC
T.A.L IN
T.A.R OUT
T.A.L OUT
GND
I2C DATA
I2C CLK
FROM/TO IF CN401
IC4A01 TDA9800
IC4A02 TDA9840
SUPPLY
AGC
ViF-PLL
LOGIC
FM-PLL
OSCIL.
REFER. VOLTA.
DIGITAL INTEGR.
DIGITAL PLL AND DE-MODU.
I2C-BUS CONTROL
CTL LOGIC
DIGITAL PLL
LEVEL AND STEREO ADJUST
Vref
FL4A01 K9260M /B5386T
FL4A02 BP5.74MHz
XT4A01 10MHZ
TLA01 77.9MHZ
Q4A01 KTC3197-AT
Q4A02 733
W4A13 33K
W4A12 33K
R4A02 22K
R4A01 22K
C4A04 100nF(P)
L4A01 100uH
C4A01 47/16
C4A02 10nF
C4A03 2.2/50V
W4A14 BEAD
R4A03 470
C4A11 302(P)
C4A12 302(P)
C4A13 10nF(P)
C4A14 10nF(P)
R4A12 1K
R4A13 1K
R4A15 1K
R4A21 270
C4A06 10nF
C4A05 47/16
R4A04 5.6K
R4A05 1.8K
C4A24 10nF
L4A02 1.3uH
C4A08 10nF
R4A08 2.7K
R4A09 180
C4A09 100nF(P)
C4A10 2.2/50
C4A07 10nF
R4A16 47
R4A06 1.5K
R4A07 82
R4A20 2.7K
R4A14 1K
C4A15 10/16
C4A16 10nF(P)
C4A17 100nF(P)
C4A19 2.2/50
C4A20 2.2/50
C4A25 10/16
R4A22 3.9K
R4A23 56K
C4A18 220/10
R4A18 9.1K
R4A19 30K
R4A25 9.1K
R4A24 130K
L4A03 2.2mH
C4A21 392(P)
C4A22 472(P)

11-11 SUB (A2/NICAM) ; SV-717F/617F Only

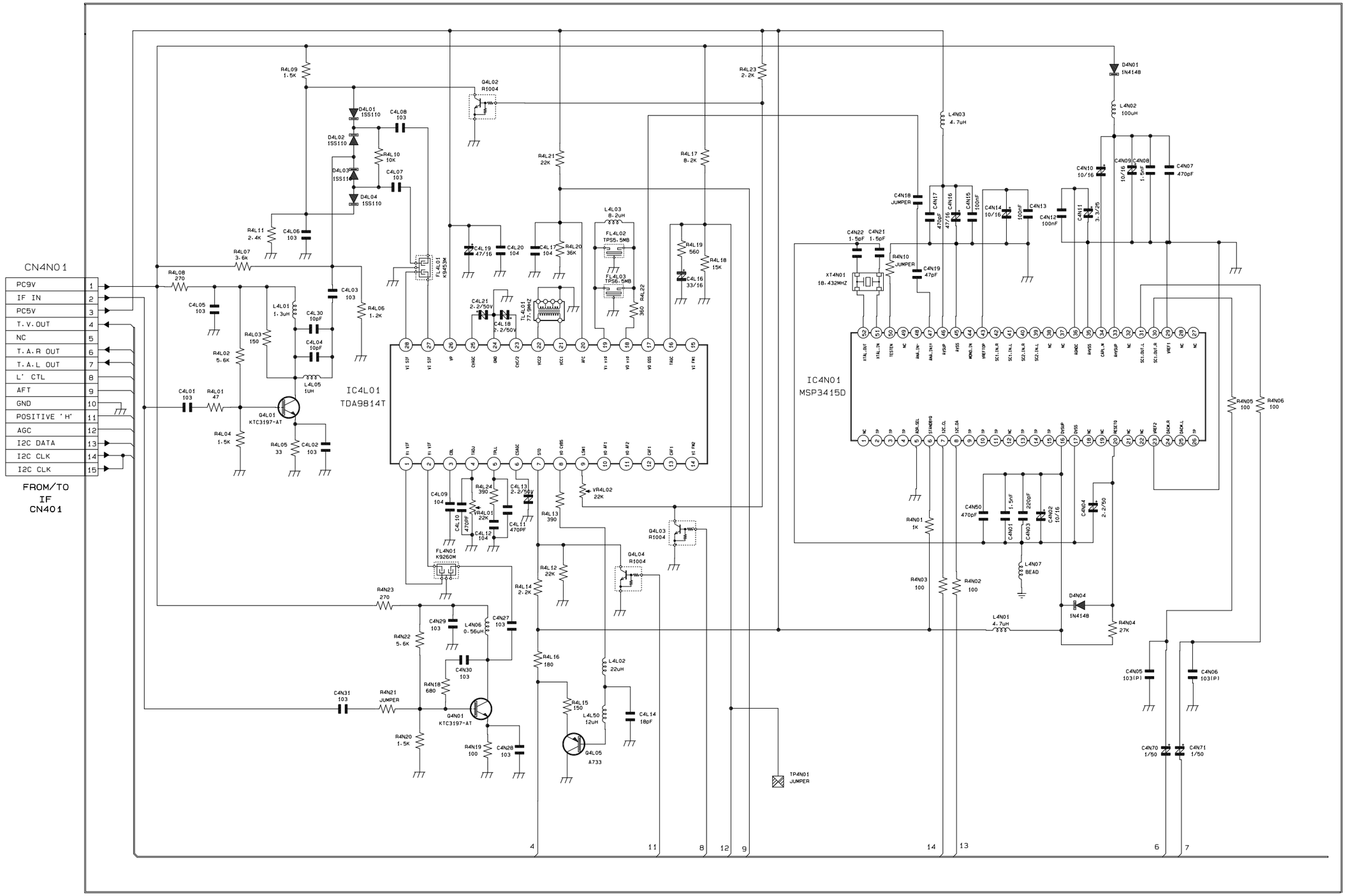

11-12 SUB (A2/NICAM)

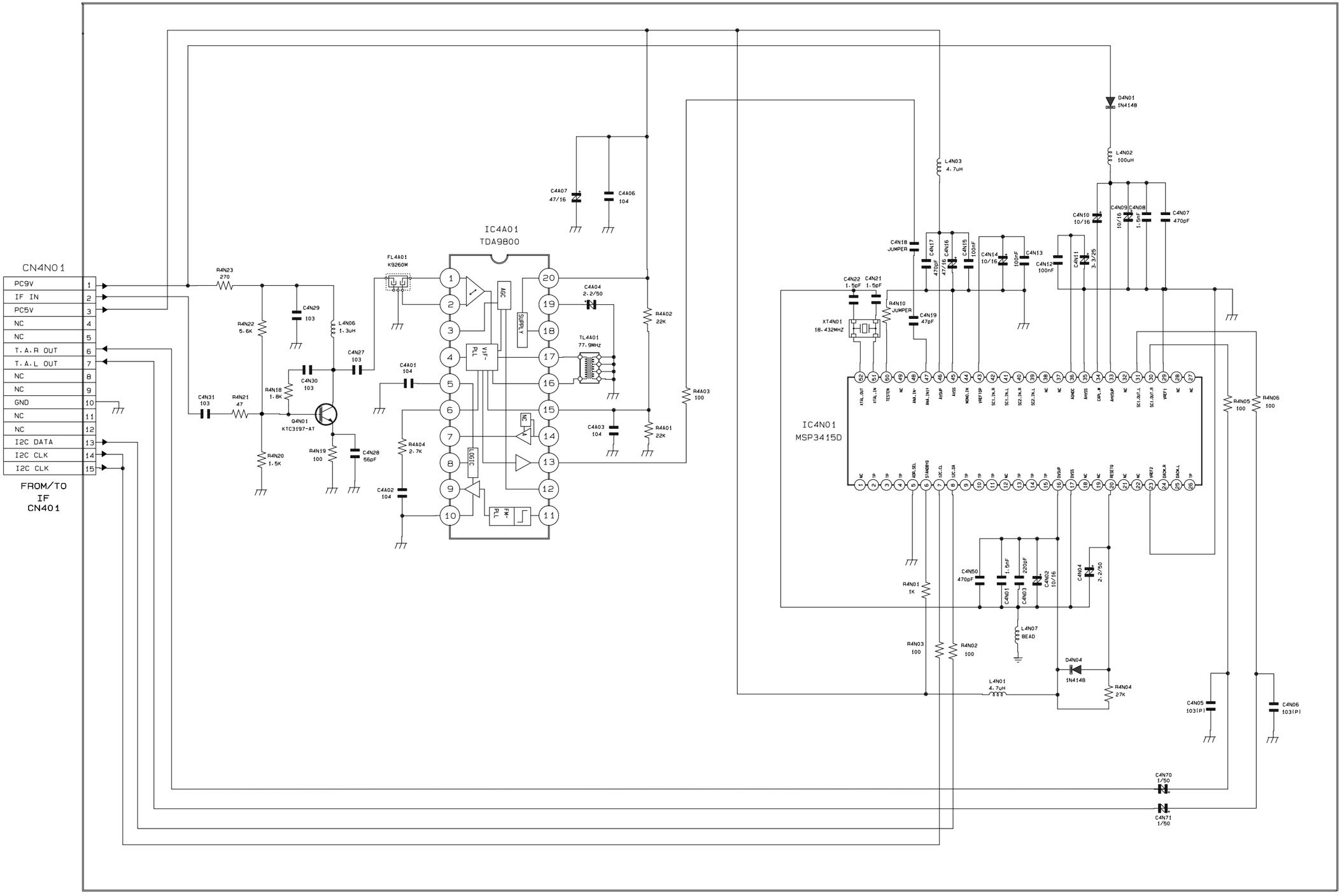

11-13 I/O (RCA)

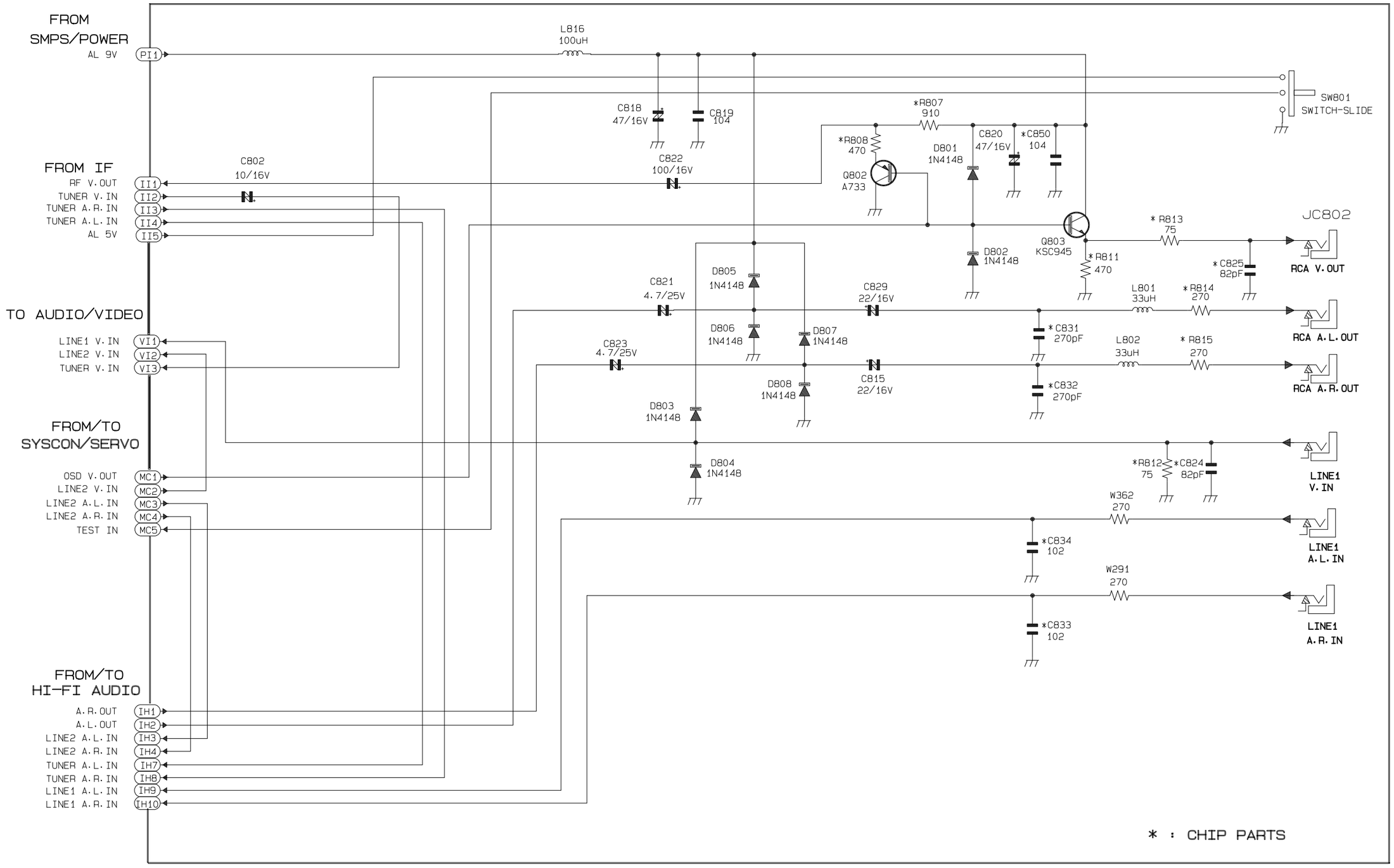
FROM SMPS/POWER
AL 9V
PI1
L815 100uH
SW801 SWITCH-SLIDE
C818 47/16V
C819 104
C822 100/16V
*R807 910
*R808 470
Q802 A733
D801 1N4148
C820 47/16V
*C850 104
FROM IF
RF V.OUT
TUNER V.IN
TUNER A.R.IN
TUNER A.L.IN
AL 5V
II1
II2
II3
II4
II5
C802 10/16V
Q803 KSC945
D802 1N4148
*R811 470
* R813 75
JC802
RCA V.OUT
*C825 82pF
TO AUDIO/VIDEO
LINE1 V.IN
LINE2 V.IN
TUNER V.IN
VI1
VI2
VI3
C821 4.7/25V
D805 1N4148
C829 22/16V
L801 33uH
*R814 270
D806 1N4148
D807 1N4148
*C831 270pF
RCA A.L.OUT
C823 4.7/25V
L802 33uH
* R815 270
RCA A.R.OUT
D808 1N4148
C815 22/16V
*C832 270pF
D803 1N4148
FROM/TO SYSCON/SERVO
OSD V.OUT
LINE2 V.IN
LINE2 A.L.IN
LINE2 A.R.IN
TEST IN
MC1
MC2
MC3
MC4
MC5
D804 1N4148
*R812 75
*C824 82pF
LINE1 V.IN
W362 270
*C834 102
LINE1 A.L.IN
W291 270
*C833 102
LINE1 A.R.IN
FROM/TO HI-FI AUDIO
A.R.OUT
A.L.OUT
LINE2 A.L.IN
LINE2 A.R.IN
TUNER A.L.IN
TUNER A.R.IN
LINE1 A.L.IN
LINE1 A.R.IN
IH1
IH2
IH3
IH4
IH7
IH8
IH9
IH10
* : CHIP PARTS

11-14 I/O (1 SCART)

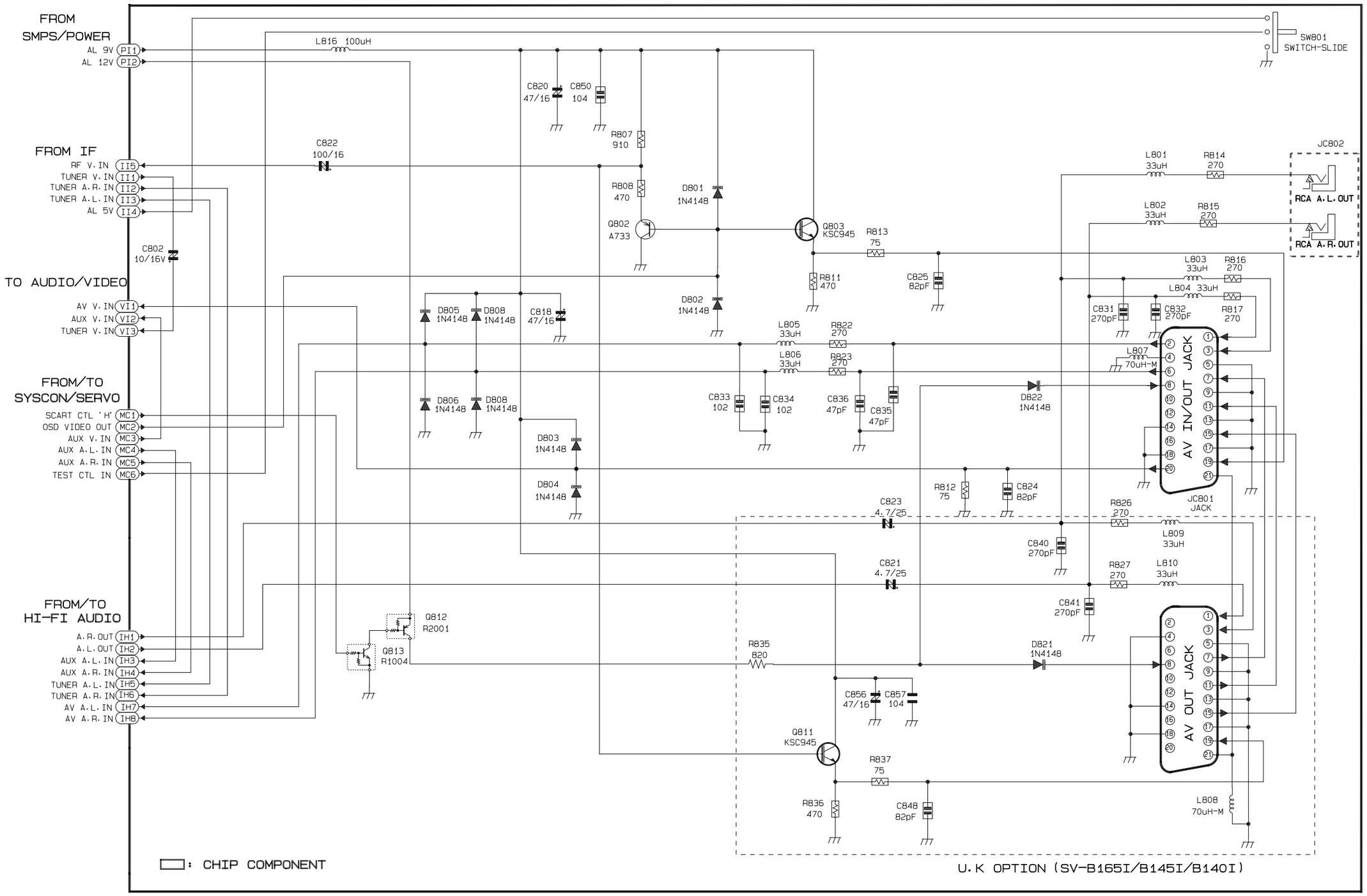

11-15 I/O (2 SCART)

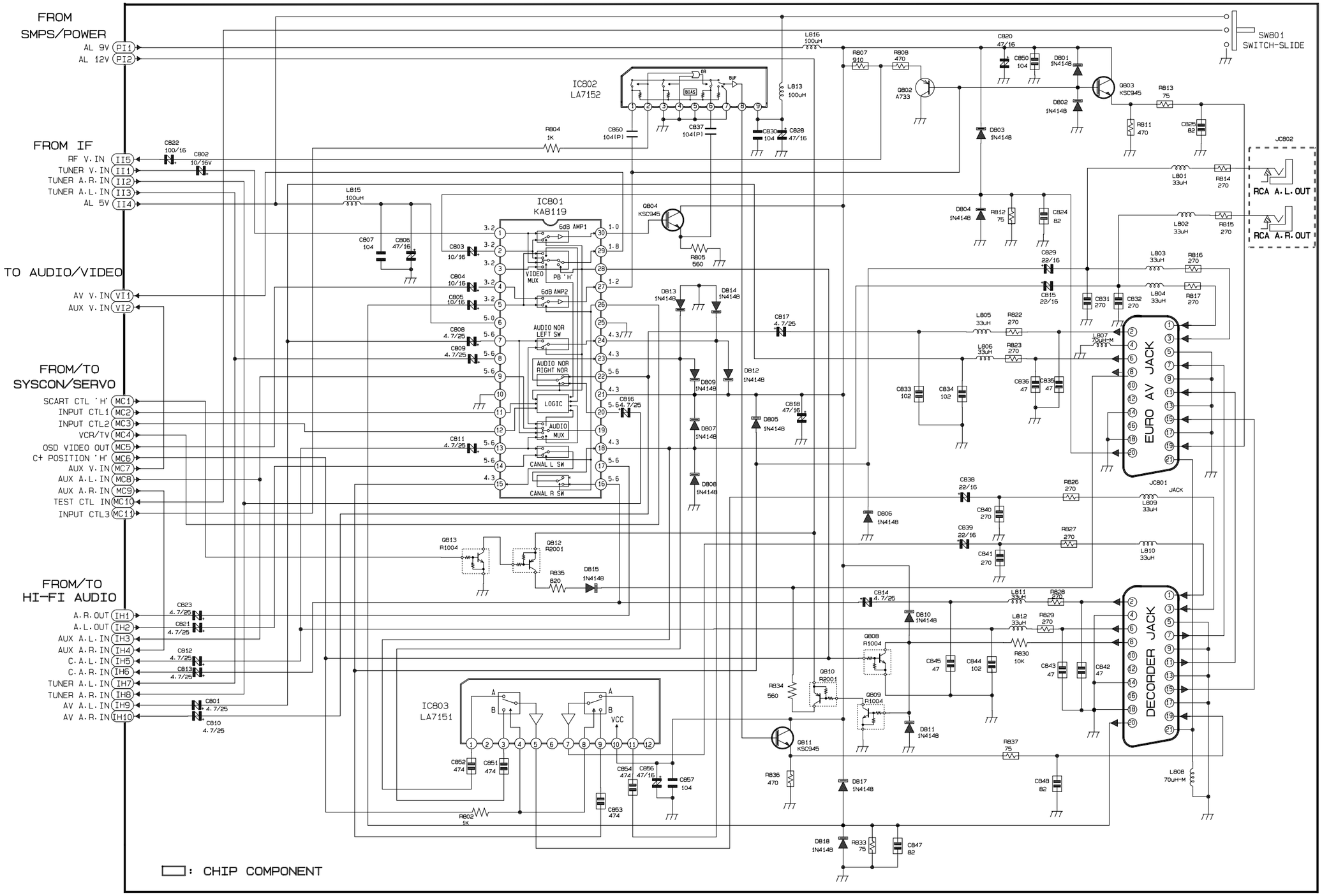

11-16 Function-Timer (SV-717X/715X/700XK/717F/717B/B160B/SVR-715)

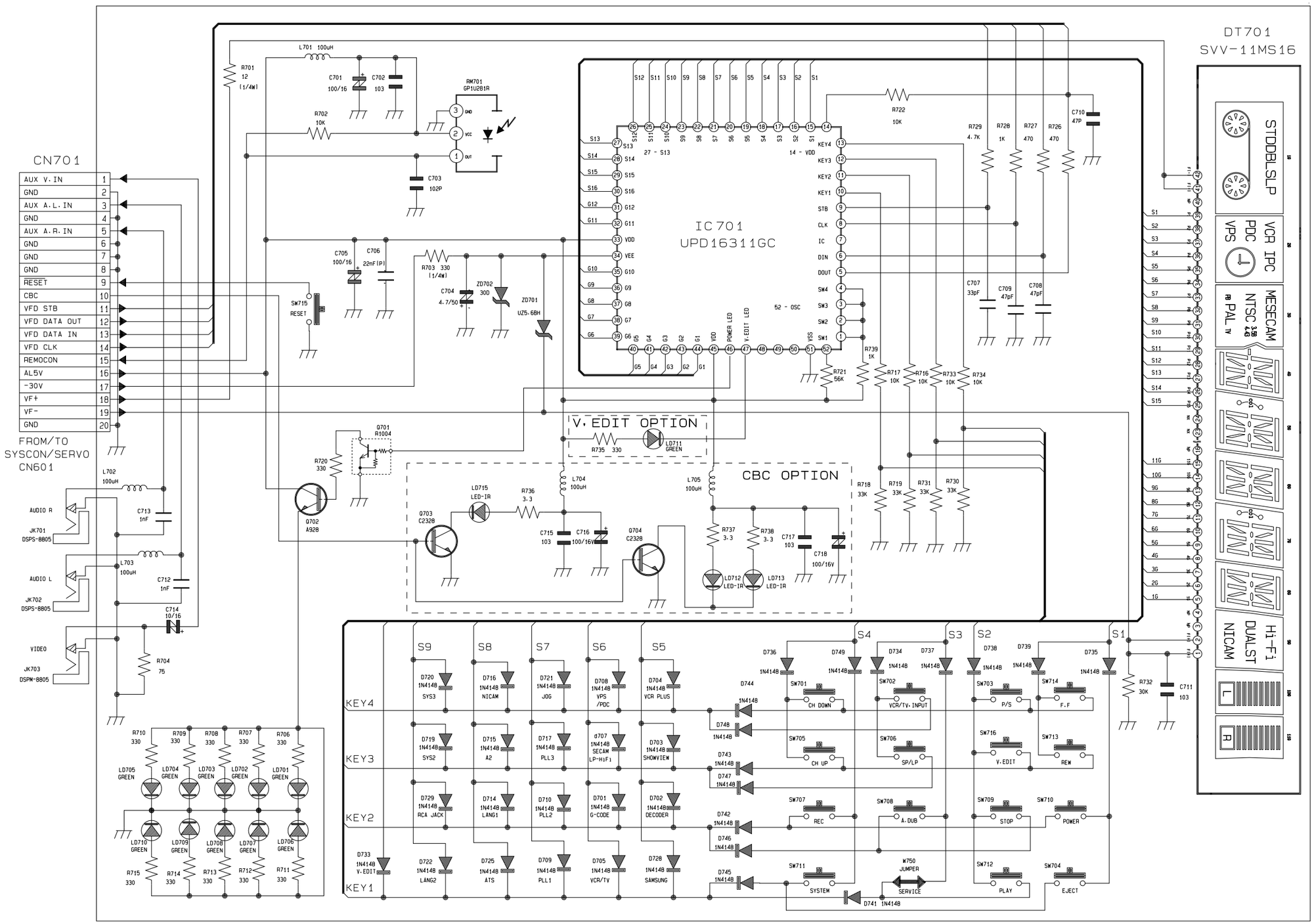

11-17 Function-Timer (SV-617X/615X/617F/617B/615B/615G/B140G/SVR-615)

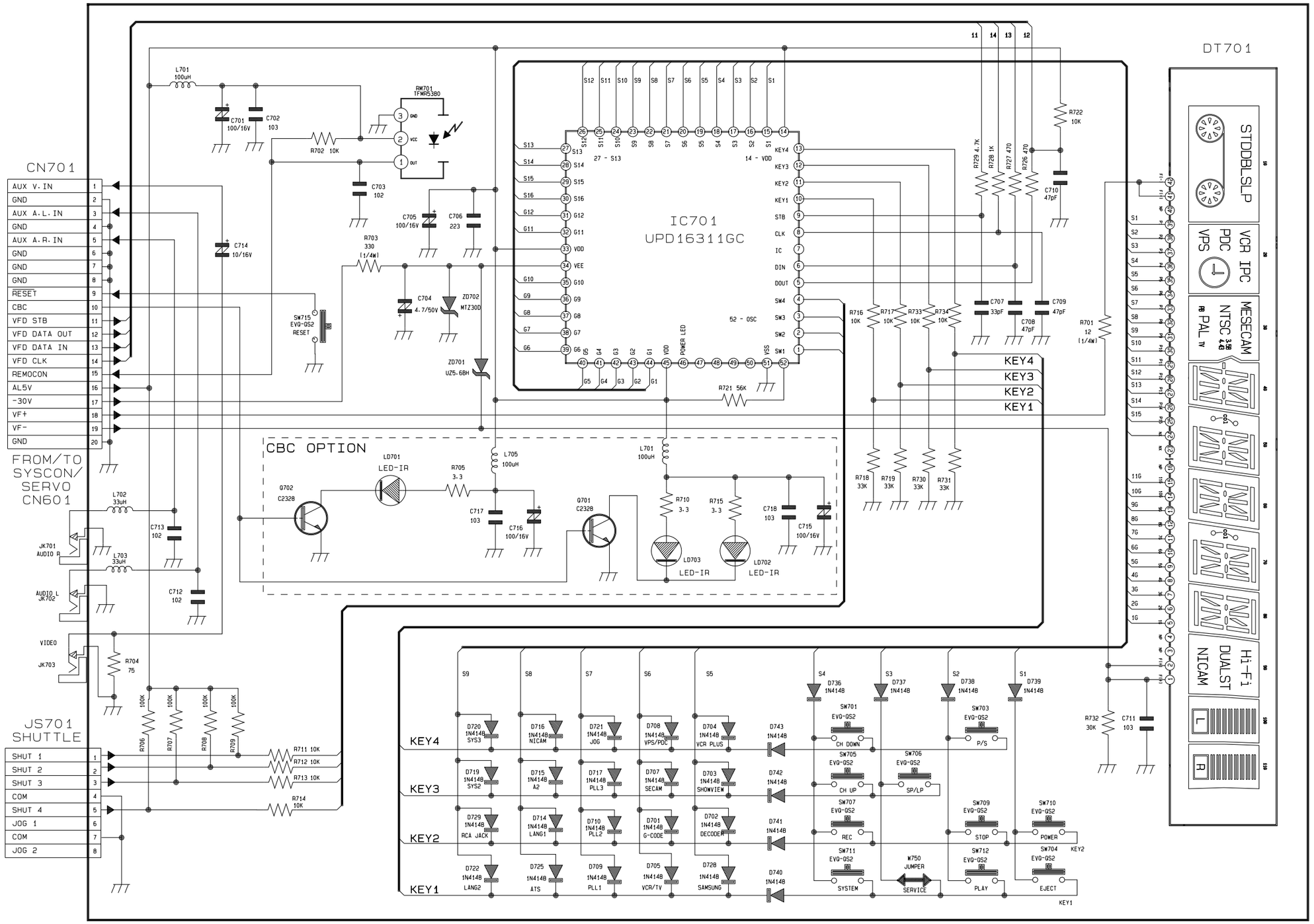

11-18 Remote-Control (Suhttle)

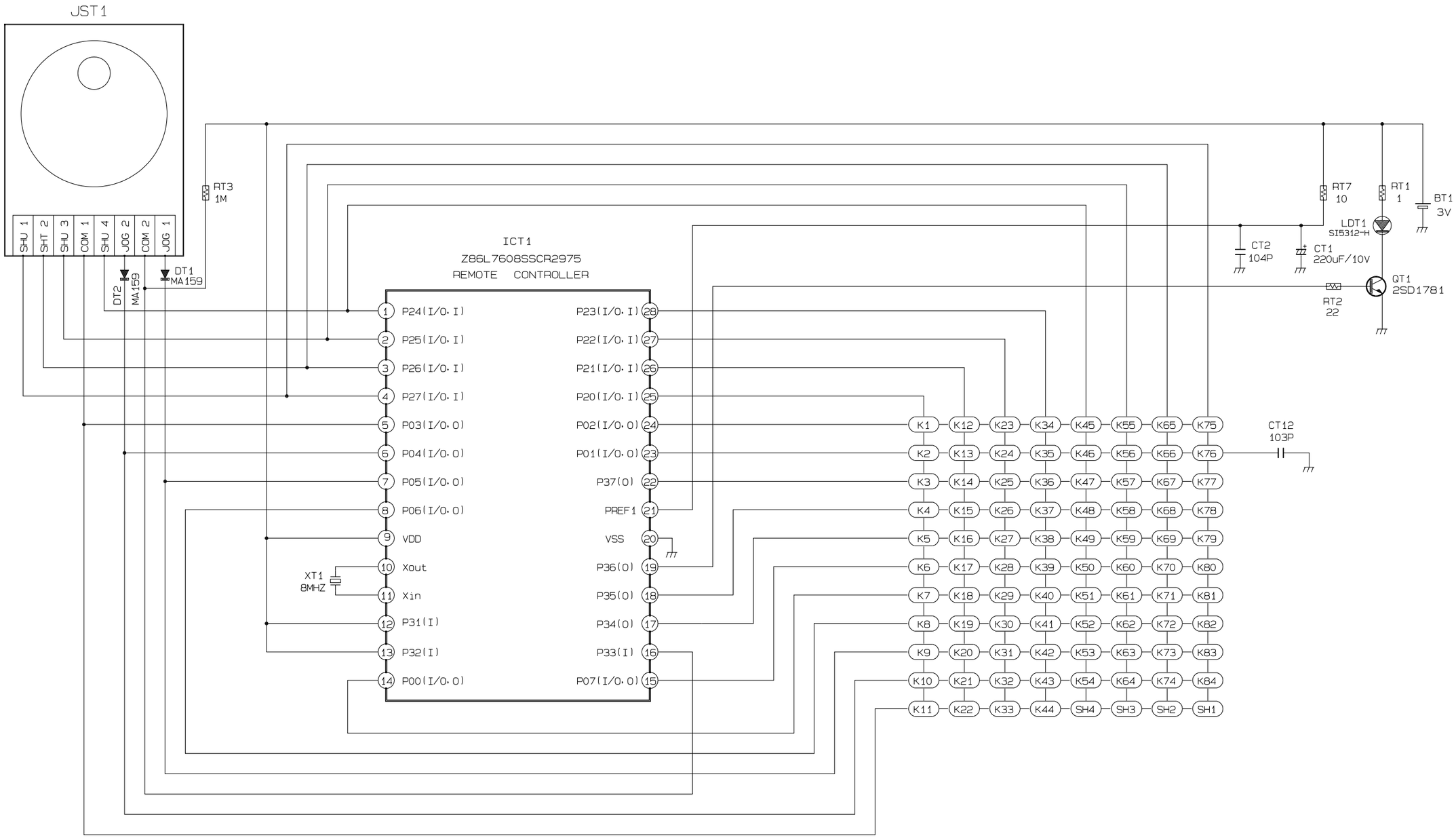
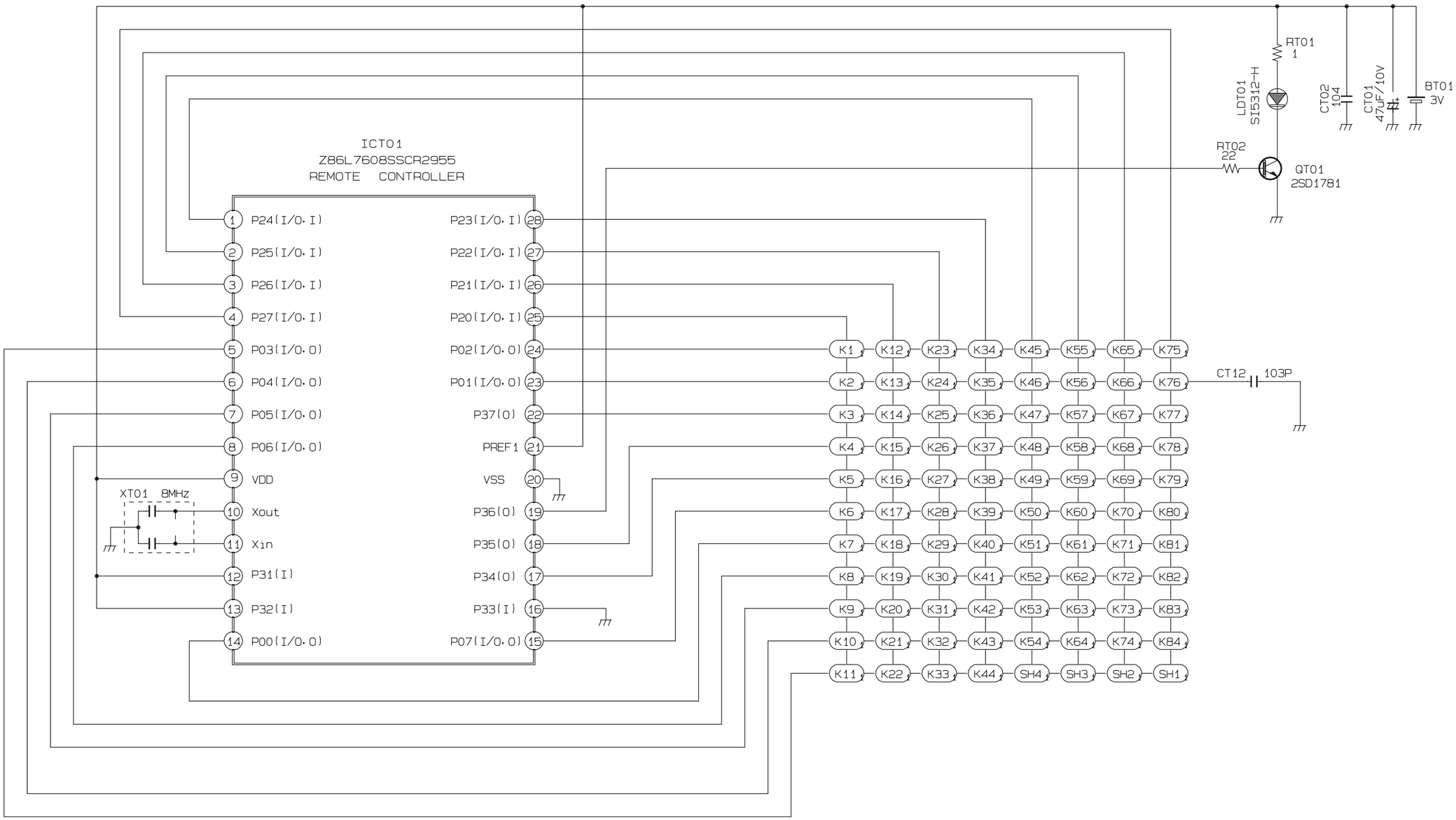
11-19 Remote-Control (Without Shuttle)