11. Schematic Diagrams

		Page
◆ Block Identification of Main PCB		11-2
11-1	S.M.P.S/Power	11-3
11-2	System Control/Servo	11-4
11-3	Audio/Video (4 Head)	11-5
11-4	Audio/Video (2 Head)	11-6
11-5	IF	11-7
11-6	I/O	11-8
11-7	SECAM (SV-415F/410F/215F/210F Only)	11-9
11-8	SUB (L. MONO ; SV-415F/410F/215F/210F Only)	11-10
11-9	VPS/PDC	11-11
11-10	Function-Timer	11-12
11-11	Remote-Control (Normal)	11-13
11-12	Remote-Control (Multi)	11-14

Note

For schematic Diagram
- Resistors are in ohms, 1/8W unless otherwise noted.
- Circled numbers refer to waveforms.

Special note :
Most semiconductor devices are electrostatically sensitive and therefore require the special handling techniques described under the “electrostatically sensitive (ES) devices” section of this service manual.

Note :
Do not use the part number shown on this drawing for ordering. The correct part number is shown in the parts list (may be slightly different or amended since this drawing was prepared).

Important safety notices :
Components identified with the mark ⚠ have the special characteristics for safety. When replacing any of these components. Use only the same type.

◆ Block Identification of Main PCB

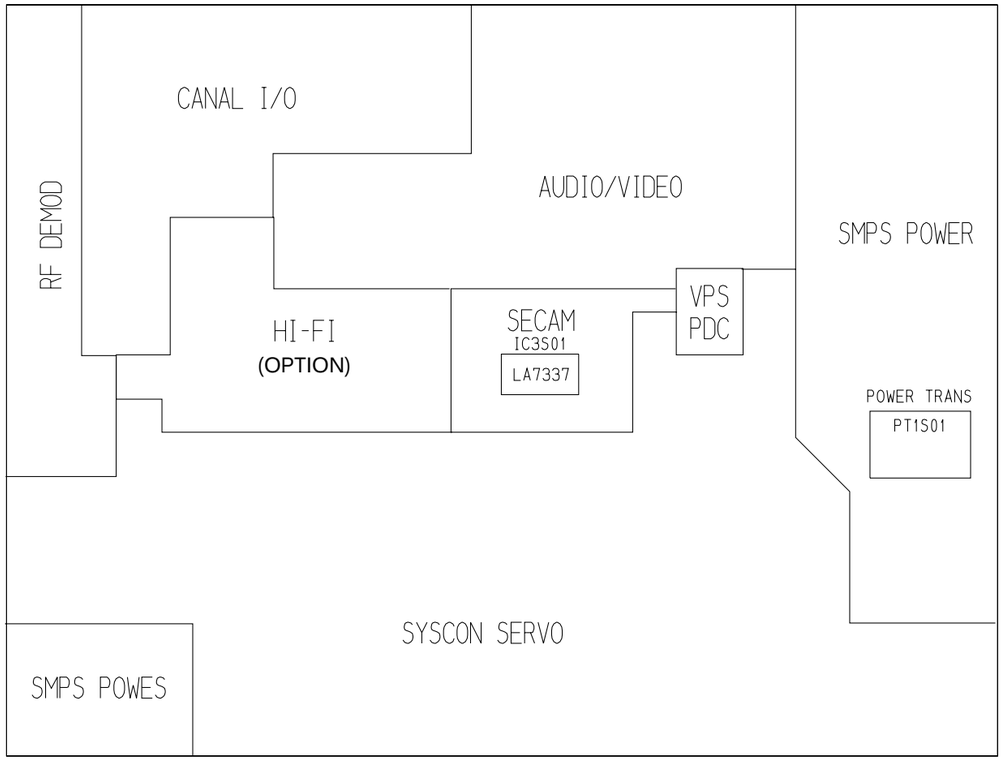

(Component Side)

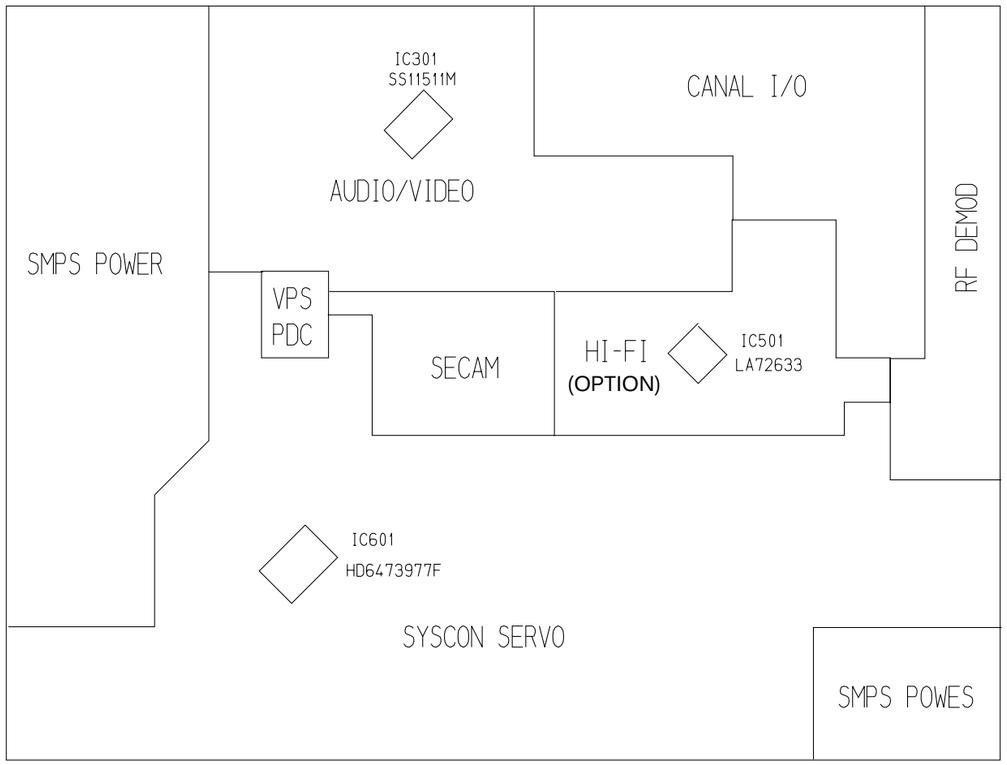

(Conductor Side)

11-1 S.M.P.S/POWER

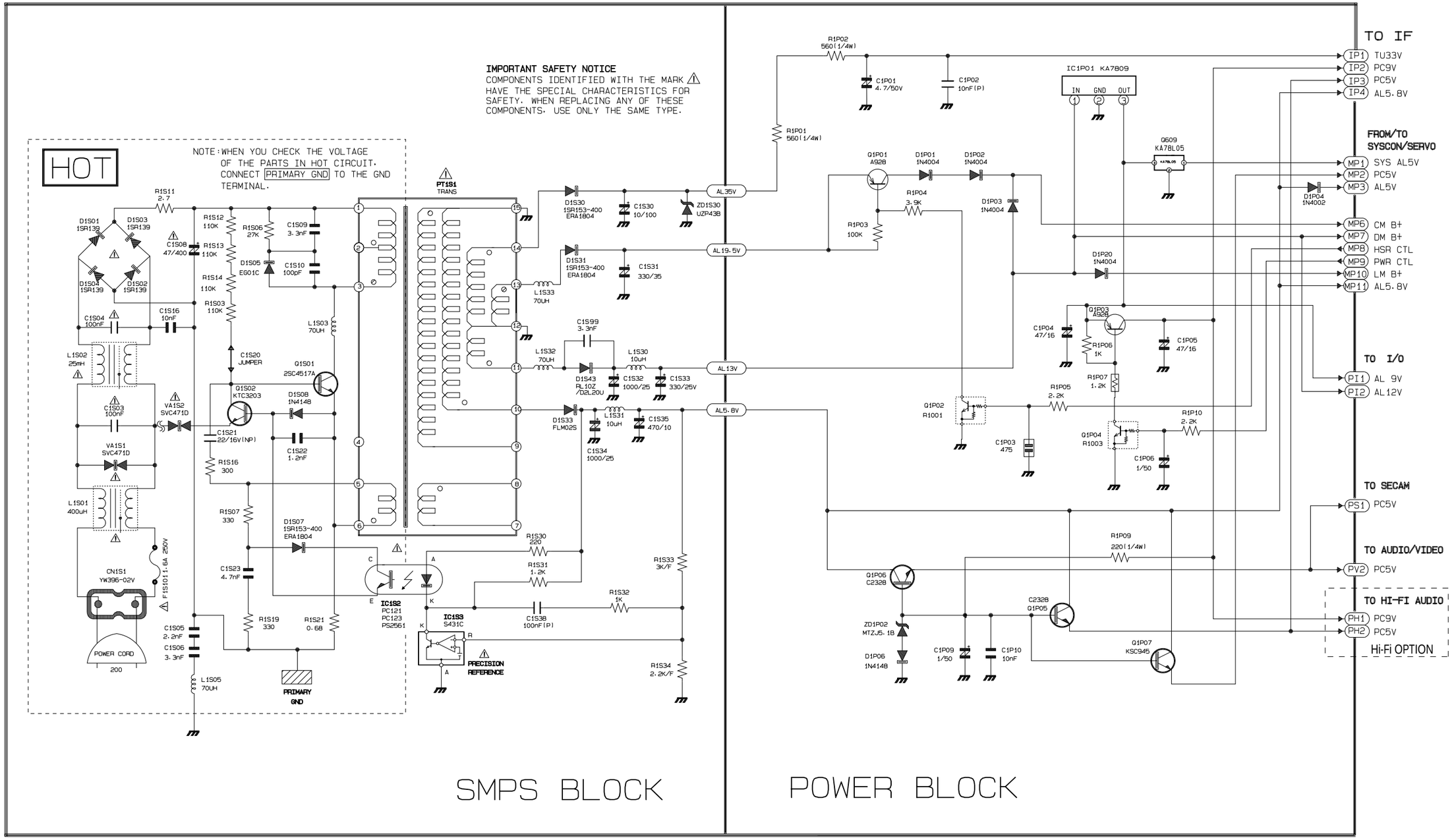

11-2 System Control/Servo

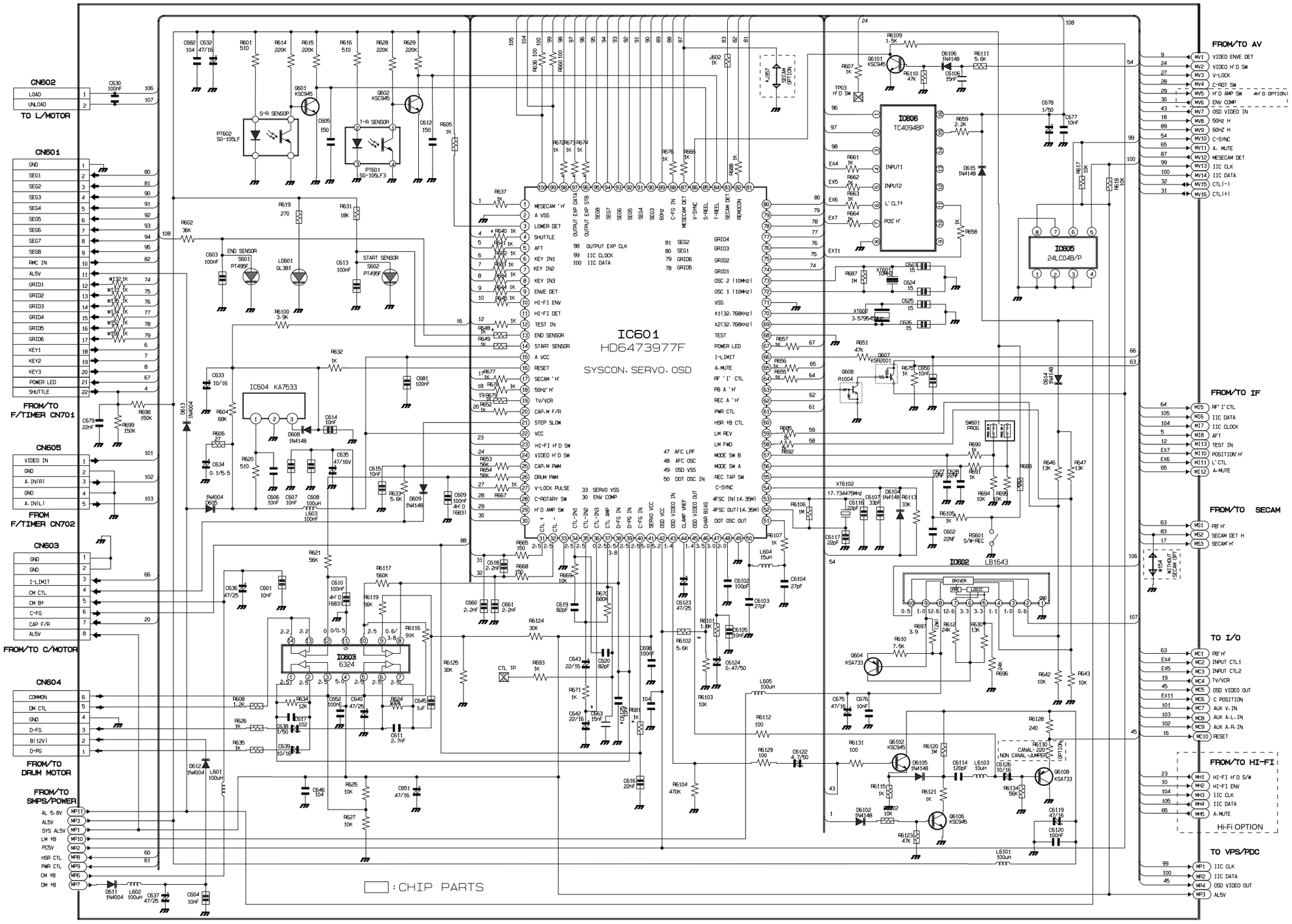

11-3 Audio/Video (4 Head)

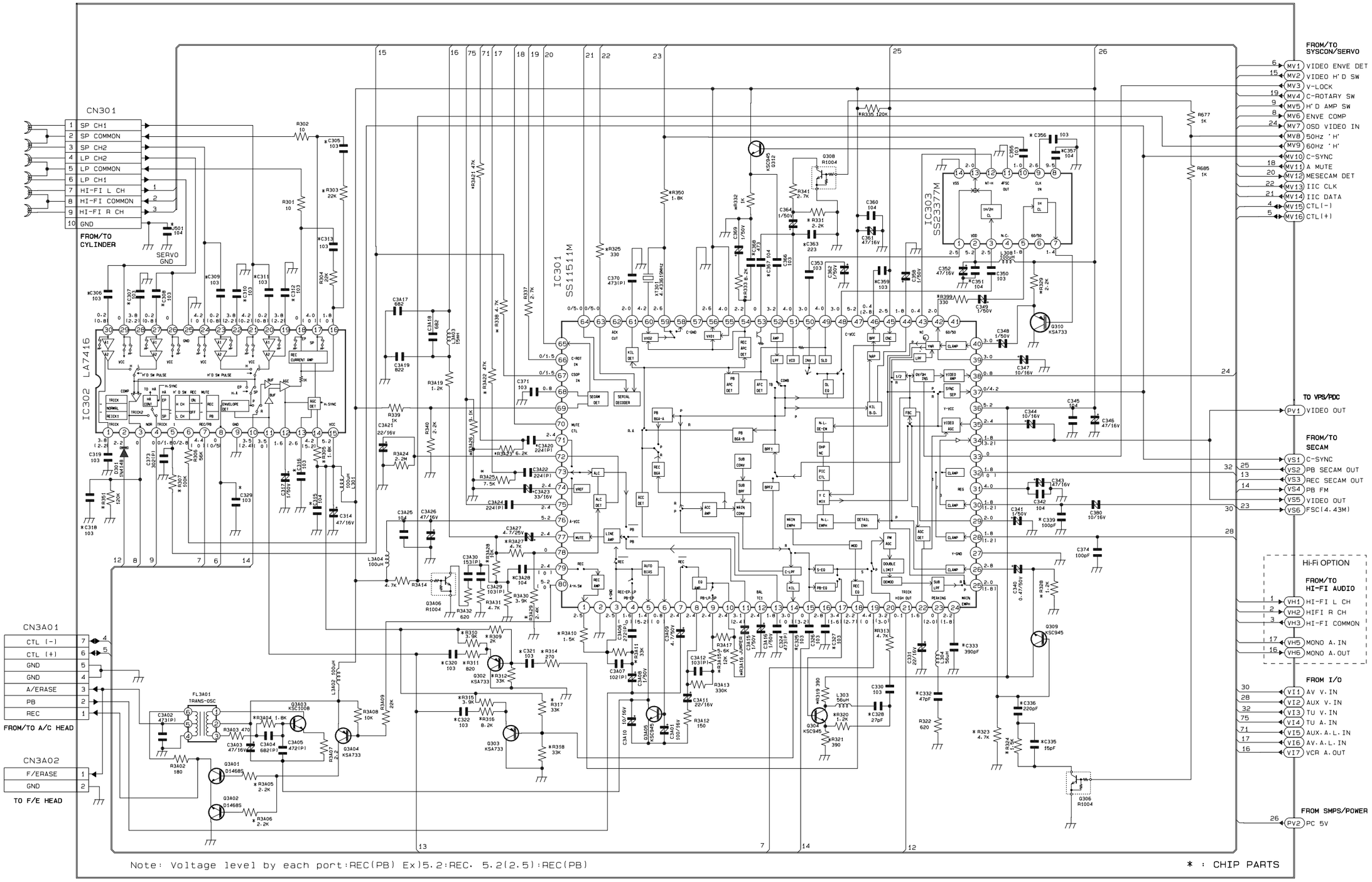

11-4 Audio/Video (2 Head)

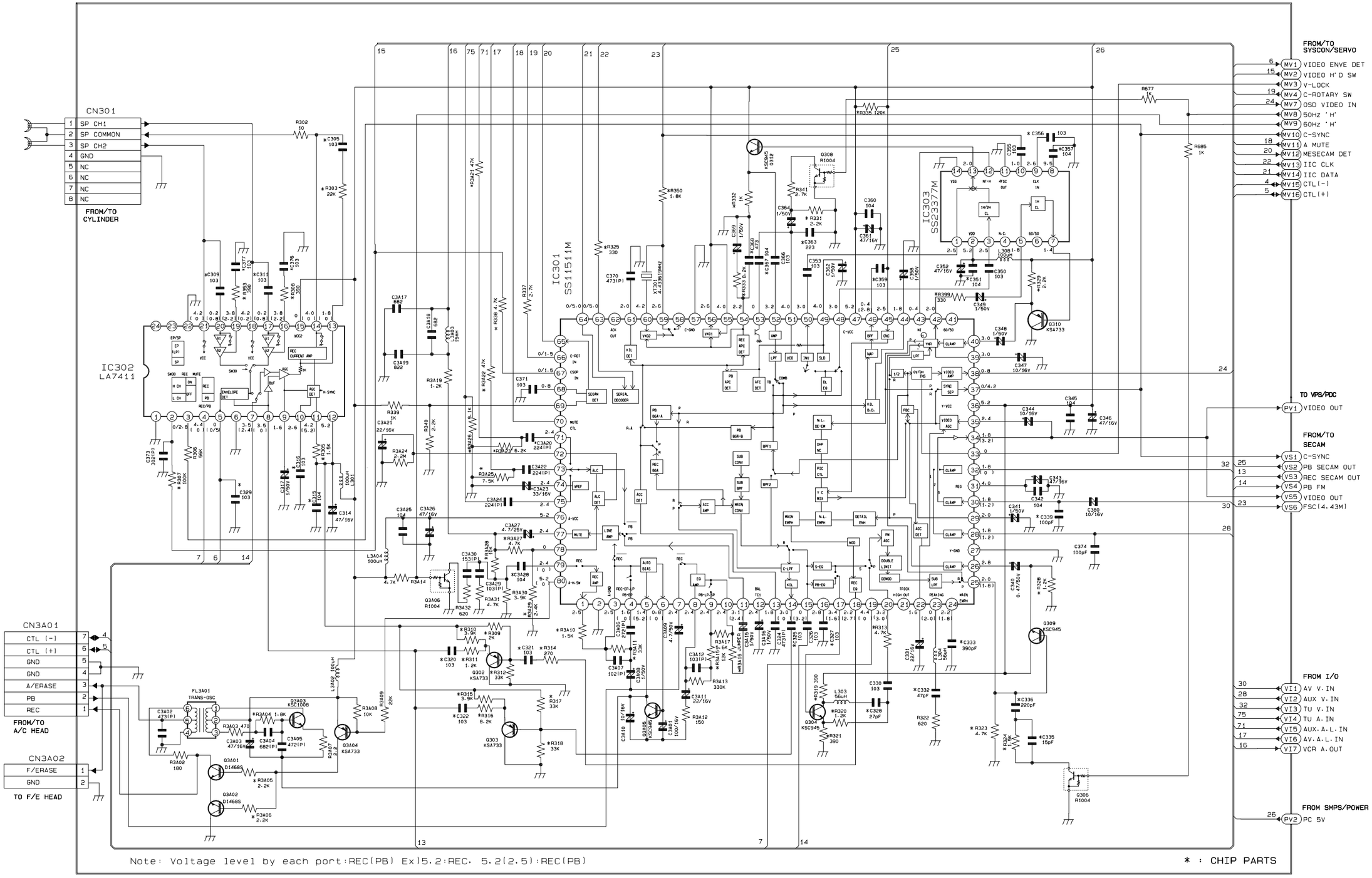

11-5 IF

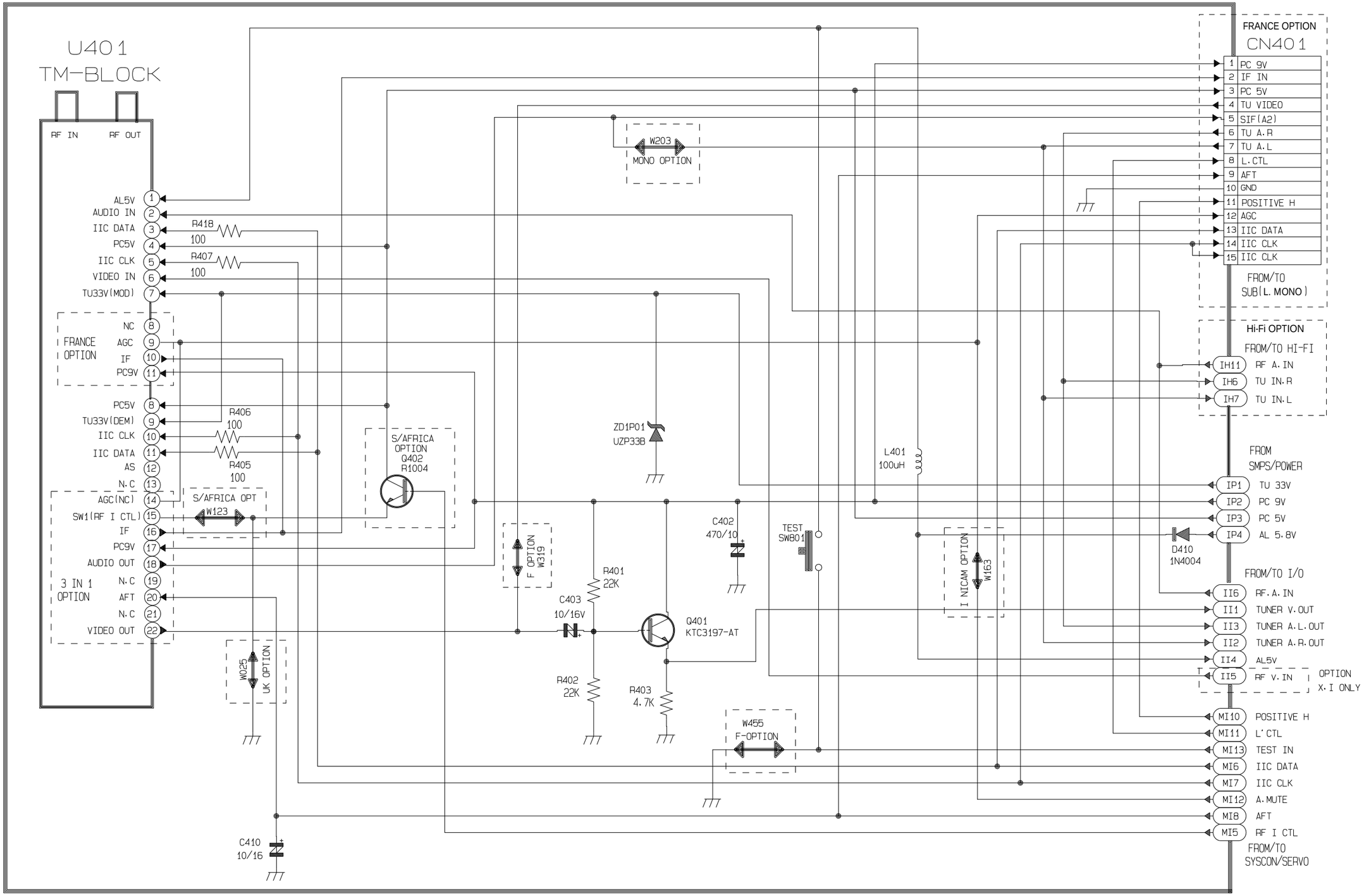
U401
TM-BLOCK
RF IN
RF OUT
AL5V
AUDIO IN
IIC DATA
PC5V
IIC CLK
VIDEO IN
TU33V(MOD)
NC
AGC
IF
PC9V
FRANCE OPTION
PC5V
TU33V(DEM)
IIC CLK
IIC DATA
AS
N.C
AGC(NC)
SW1(RF I CTL)
IF
PC9V
AUDIO OUT
N.C
AFT
N.C
VIDEO OUT
3 IN 1 OPTION
R418
100
R407
100
R406
100
R405
100
S/AFRICA OPT
W123
S/AFRICA OPTION
Q402
R1004
W203
MONO OPTION
ZD1P01
UZP33B
L401
100uH
F OPTION
W319
R401
22K
C403
10/16V
R402
22K
R403
4.7K
Q401
KTC3197-AT
C402
470/10
TEST
SW801
I NICAM OPTION
W163
W025
UK OPTION
W455
F-OPTION
C410
10/16
FRANCE OPTION
CN401
1 PC 9V
2 IF IN
3 PC 5V
4 TU VIDEO
5 SIF(A2)
6 TU A.R
7 TU A.L
8 L.CTL
9 AFT
10 GND
11 POSITIVE H
12 AGC
13 IIC DATA
14 IIC CLK
15 IIC CLK
FROM/TO
SUB(L. MONO)
Hi-Fi OPTION
FROM/TO HI-FI
IH11 RF A. IN
IH6 TU IN.R
IH7 TU IN.L
FROM
SMPS/POWER
IP1 TU 33V
IP2 PC 9V
IP3 PC 5V
IP4 AL 5.8V
D410
1N4004
FROM/TO I/O
II6 RF.A.IN
II1 TUNER V.OUT
II3 TUNER A.L.OUT
II2 TUNER A.R.OUT
II4 AL5V
II5 RF V.IN
OPTION
X.I ONLY
MI10 POSITIVE H
MI11 L'CTL
MI13 TEST IN
MI6 IIC DATA
MI7 IIC CLK
MI12 A.MUTE
MI8 AFT
MI5 RF I CTL
FROM/TO
SYSCON/SERVO

11-6 I/O

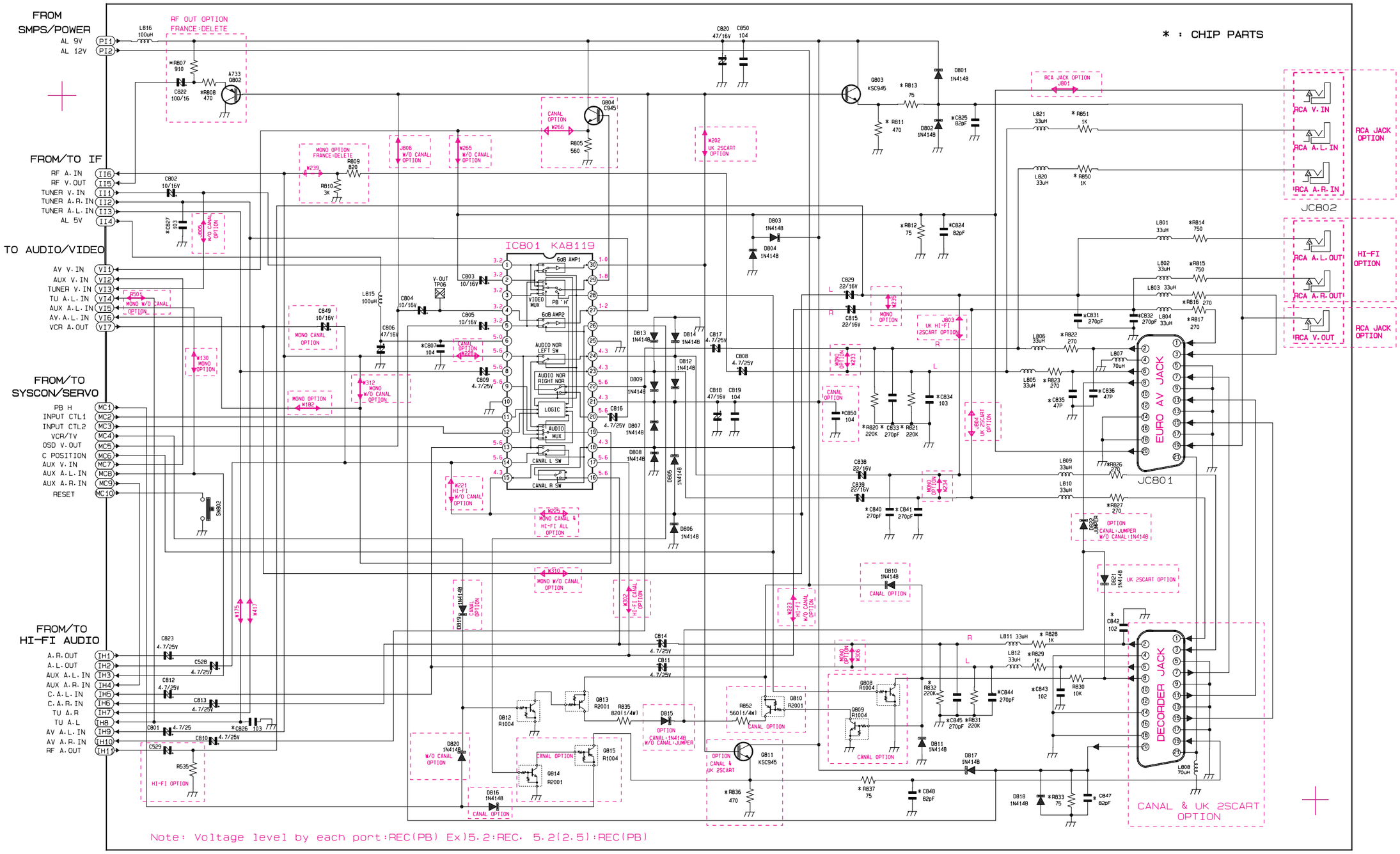
FROM SMPS/POWER
AL 9V
AL 12V
FROM/TO IF
RF A.IN
RF V.OUT
TUNER V.IN
TUNER A.R.IN
TUNER A.L.IN
AL 5V
TO AUDIO/VIDEO
AV V.IN
AUX V.IN
TUNER V.IN
TU A.L.IN
AUX A.L.IN
AV.A.L.IN
VCR A.OUT
FROM/TO SYSCON/SERVO
PB H
INPUT CTL1
INPUT CTL2
VCR/TV
OSD V.OUT
C POSITION
AUX V.IN
AUX A.L.IN
AUX A.R.IN
RESET
FROM/TO HI-FI AUDIO
A.R.OUT
A.L.OUT
AUX A.L.IN
AUX A.R.IN
C.A.L.IN
C.A.R.IN
TU A.R
TU A.L
AV A.L.IN
AV A.R.IN
RF A.OUT
* : CHIP PARTS
IC801 KA8119
JC802
JC801
DECORDER JACK
EURO AV JACK
RCA JACK OPTION
HI-FI OPTION
CANAL & UK 2SCART OPTION
Note: Voltage level by each port:REC(PB) Ex)5.2:REC. 5.2(2.5):REC(PB)

11-7 SECAM (SV-415F/410F/215F/210F Only)

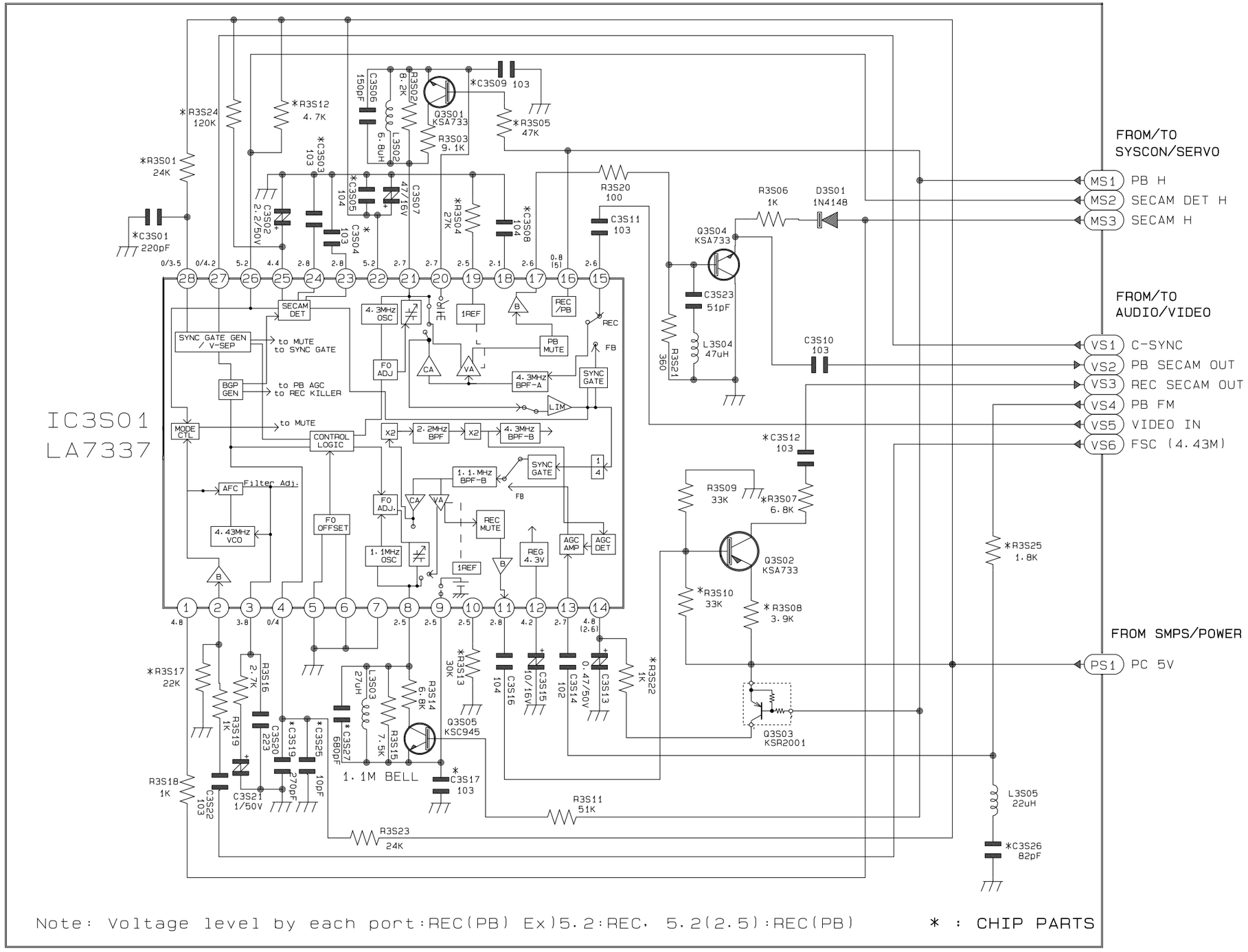

11-8 SUB (L. MONO ; SV-415F/410F/215F/210F Only)

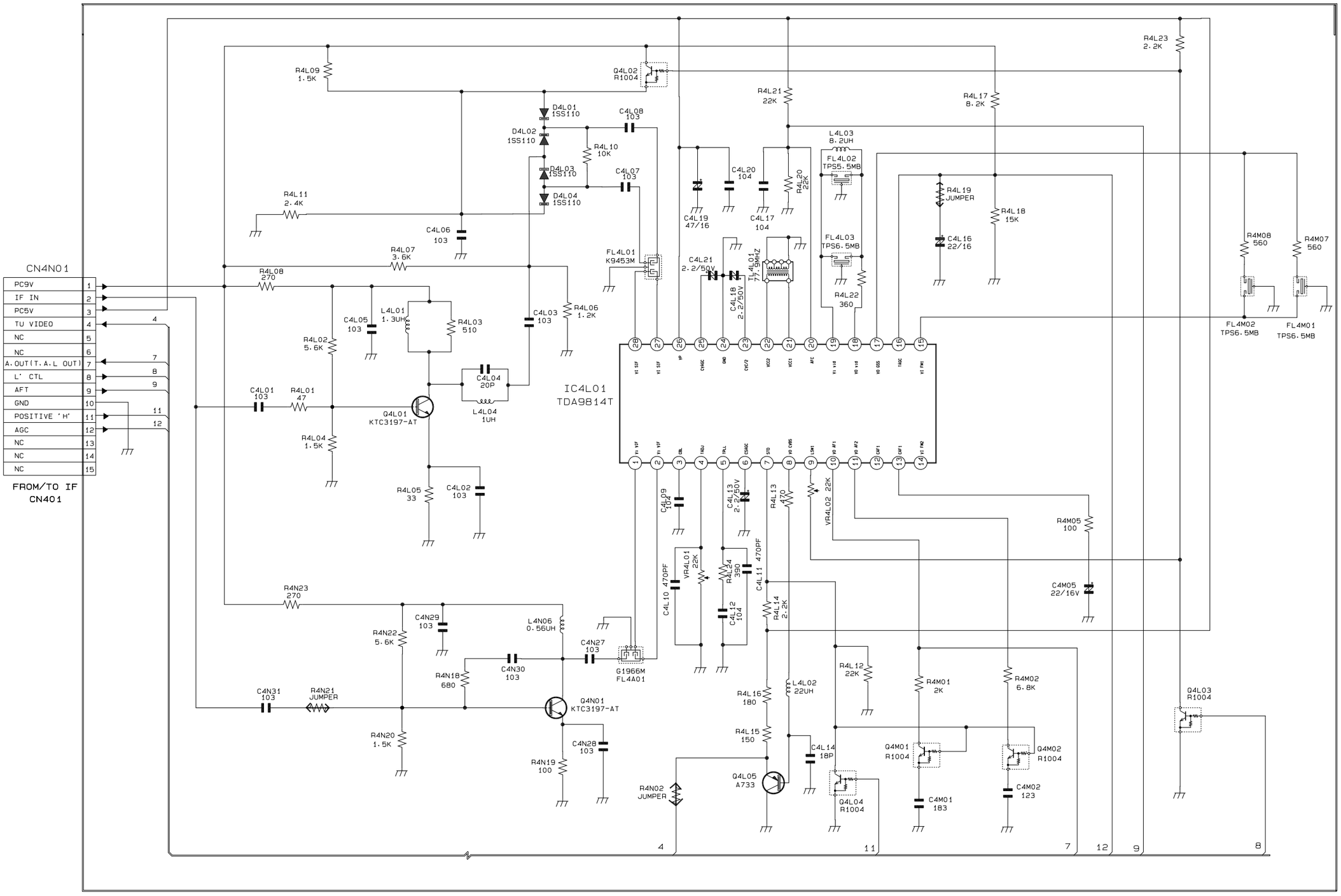

11-9 VPS/PDC

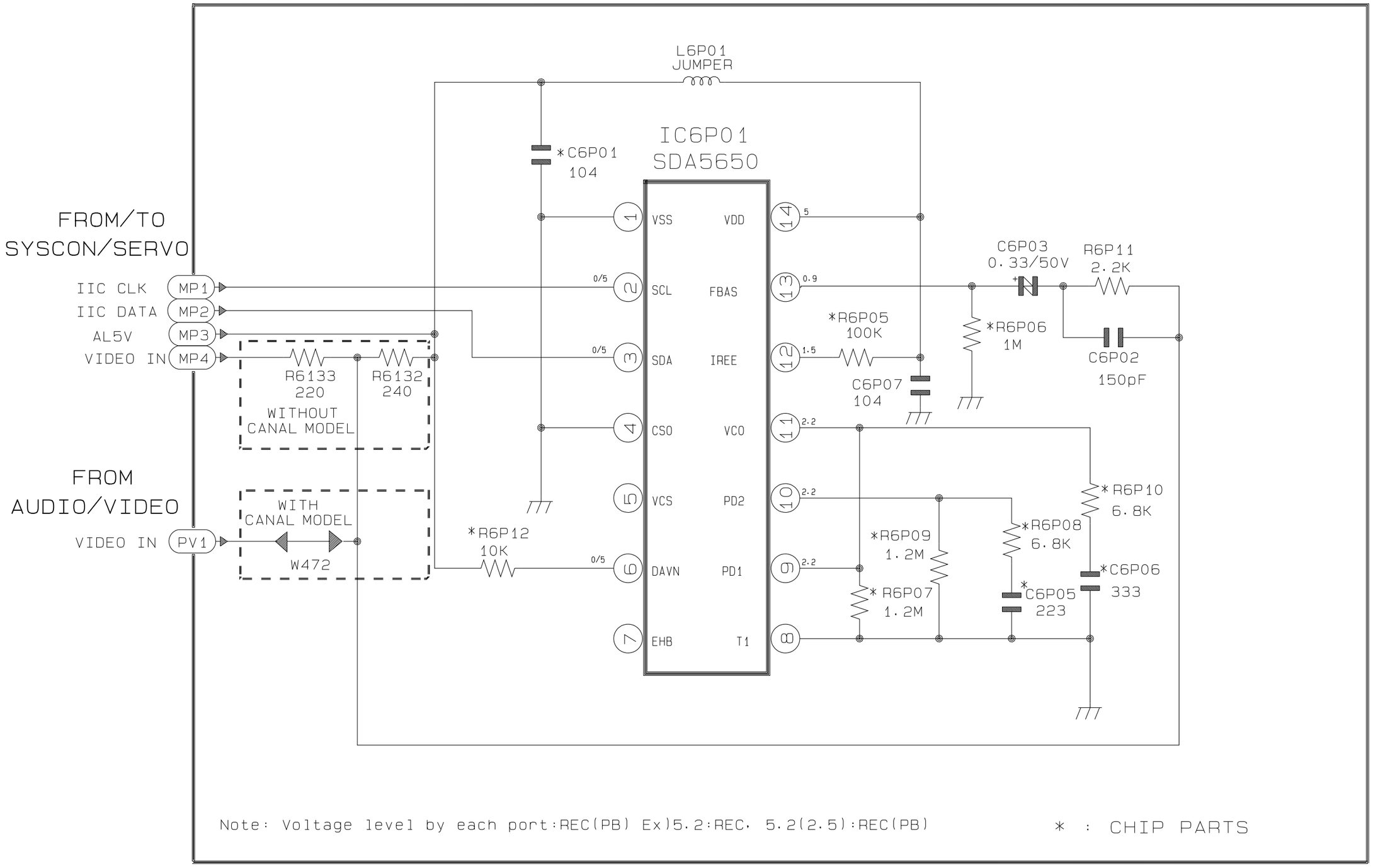
L6P01
JUMPER
IC6P01
SDA5650
*C6P01
104
FROM/TO
SYSCON/SERVO
IIC CLK
IIC DATA
AL5V
VIDEO IN
MP1
MP2
MP3
MP4
R6133
220
R6132
240
WITHOUT
CANAL MODEL
FROM
AUDIO/VIDEO
VIDEO IN
PV1
WITH
CANAL MODEL
W472
*R6P12
10K
VSS
SCL
SDA
CSO
VCS
DAVN
EHB
VDD
FBAS
IREE
VCO
PD2
PD1
T1
C6P03
0.33/50V
R6P11
2.2K
*R6P05
100K
*R6P06
1M
C6P02
150pF
C6P07
104
*R6P10
6.8K
*R6P09
1.2M
*R6P08
6.8K
*C6P06
333
*R6P07
1.2M
*C6P05
223
Note: Voltage level by each port:REC(PB) Ex)5.2:REC, 5.2(2.5):REC(PB)
* : CHIP PARTS

11-10 Function-Timer

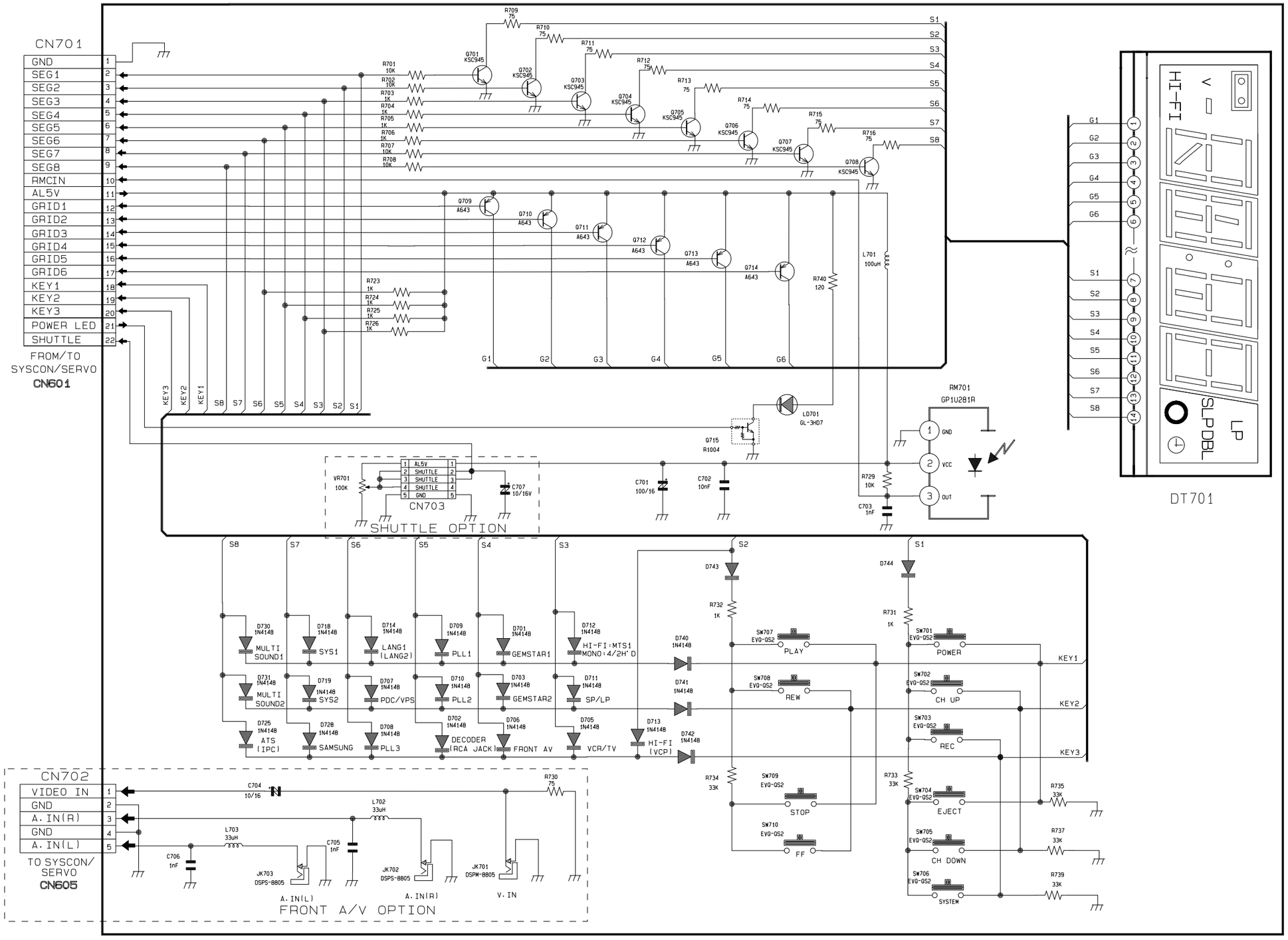

11-11 Remote-Control (Normal)

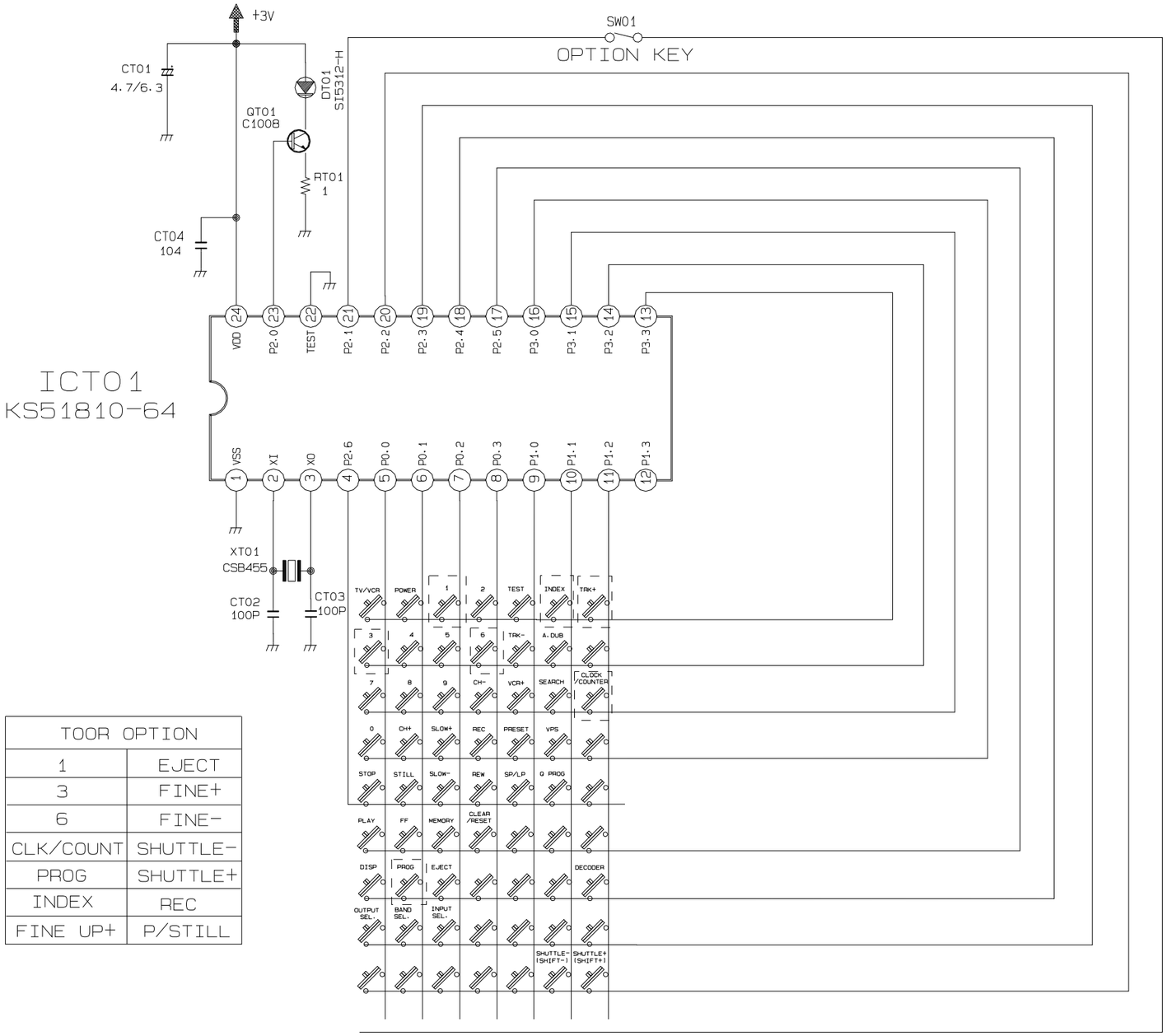

TOOR OPTION	
1	EJECT
3	FINE+
6	FINE-
CLK/COUNT	SHUTTLE-
PROG	SHUTTLE+
INDEX	REC
FINE UP+	P/STILL
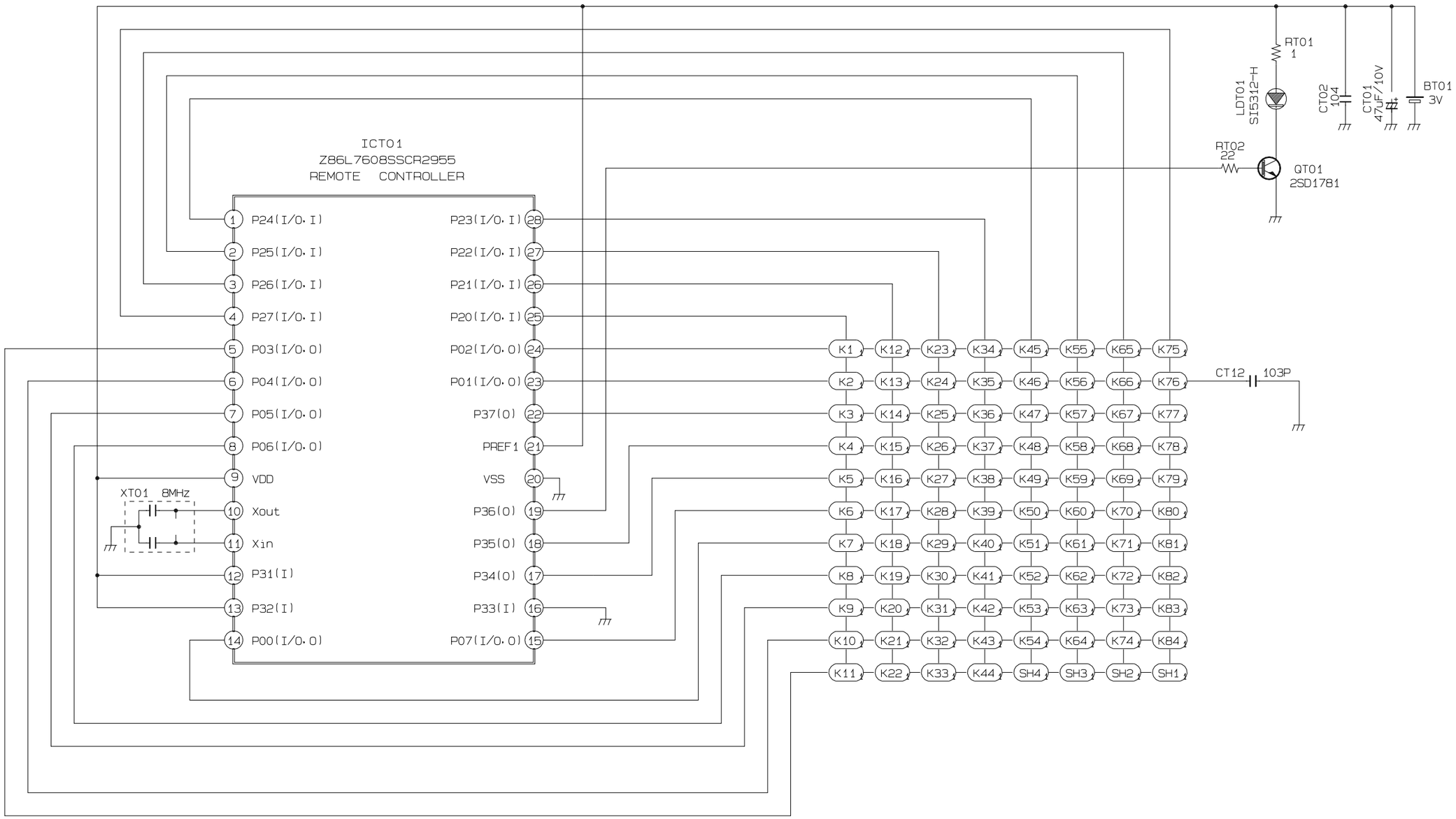
11-12 Remote-Control (Multi)