11. Schematic Diagrams

		Page
◆ Block Identification of Main PCB		11-2
11-1	S.M.P.S/Power	11-3
11-2	System Control/Servo	11-4
11-3	Audio/Video (SV-A20GK/SV-A40GK/SV-200G/SV-205G)	11-6
11-4	Audio/Video (SV-A60GK/SV-A80GK/SV-400G/SV-405G)	11-8
11-5	IF	11-10
11-6	I/O	11-12
11-7	VPS	11-13
11-8	Function-Timer (SV-A20GK/SV-A60GK/SV-200G/SV-400G)	11-14
11-9	Function-Timer (SV-A40GK/SV-A80GK/SV-205G/SV-405G)	11-15
11-10	Remote-Control	11-16

Note

For schematic Diagram
- Resistors are in ohms, 1/8W unless otherwise noted.
- Circled numbers refer to waveforms.

Special note :
Most semiconductor devices are electrostatically sensitive and therefore require the special handling techniques described under the “electrostatically sensitive (ES) devices” section of this service manual.

Note :
Do not use the part number shown on this drawing for ordering. The correct part number is shown in the parts list (may be slightly different or amended since this drawing was prepared).

Important safety notices :
Components identified with the mark ⚠ have the special characteristics for safety. When replacing any of these components. Use only the same type.

◆ Block Identification of Main PCB

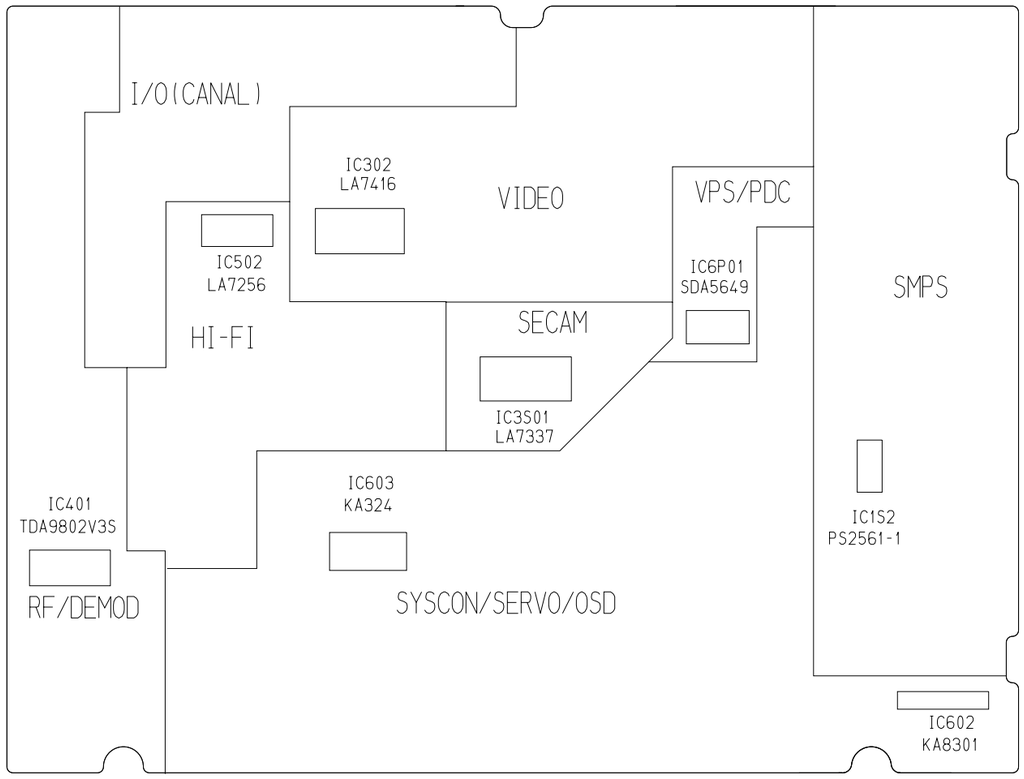

(Component Side)

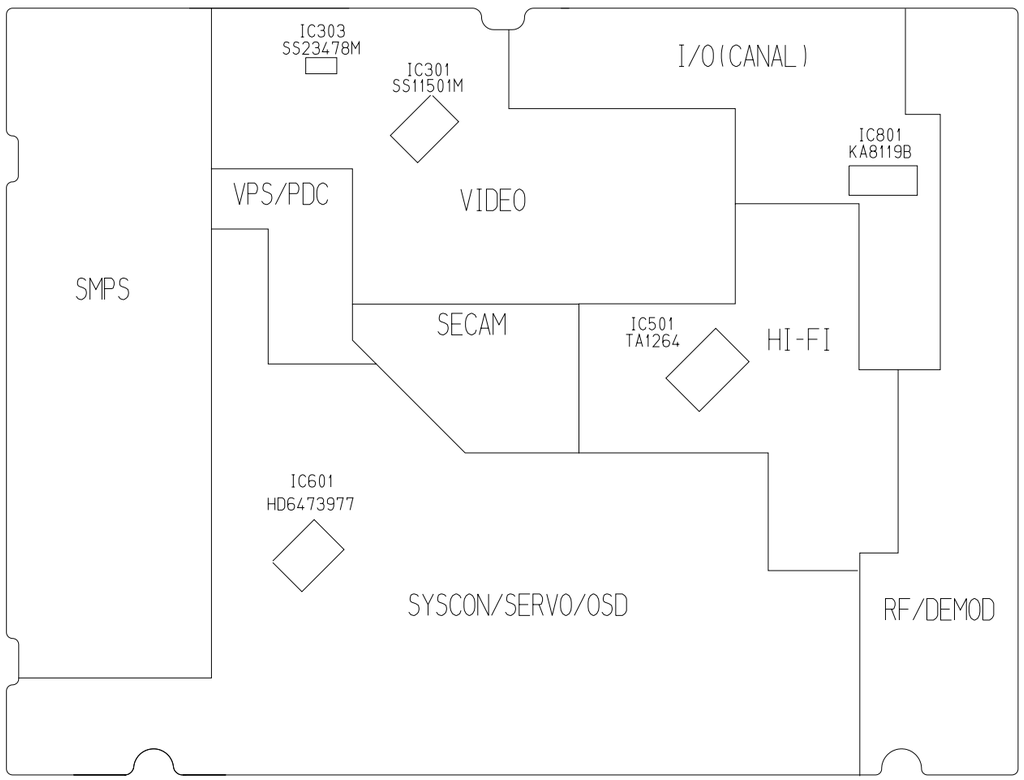

(Conductor Side)

11-1 S.M.P.S/POWER

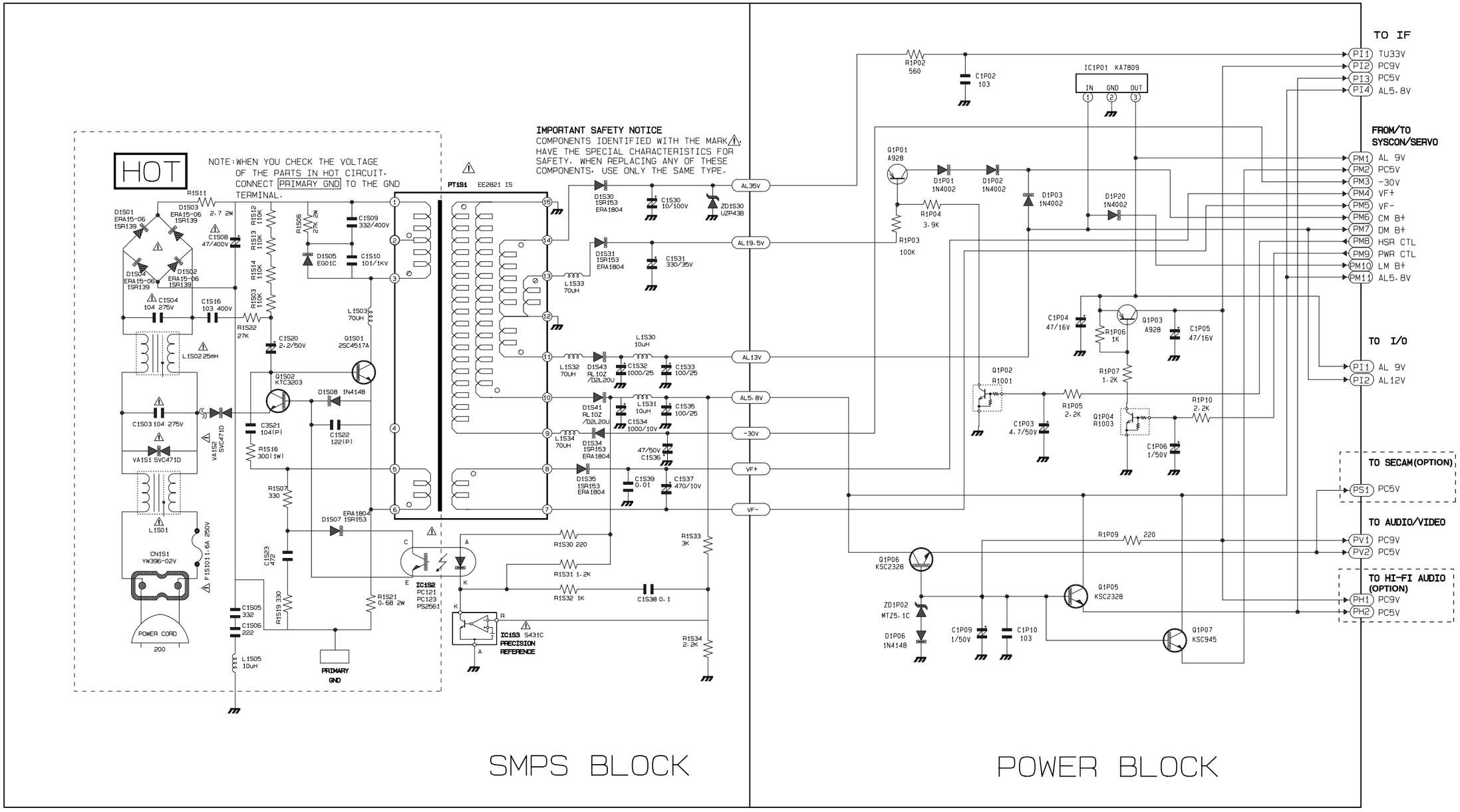

11-2 System Control/Servo

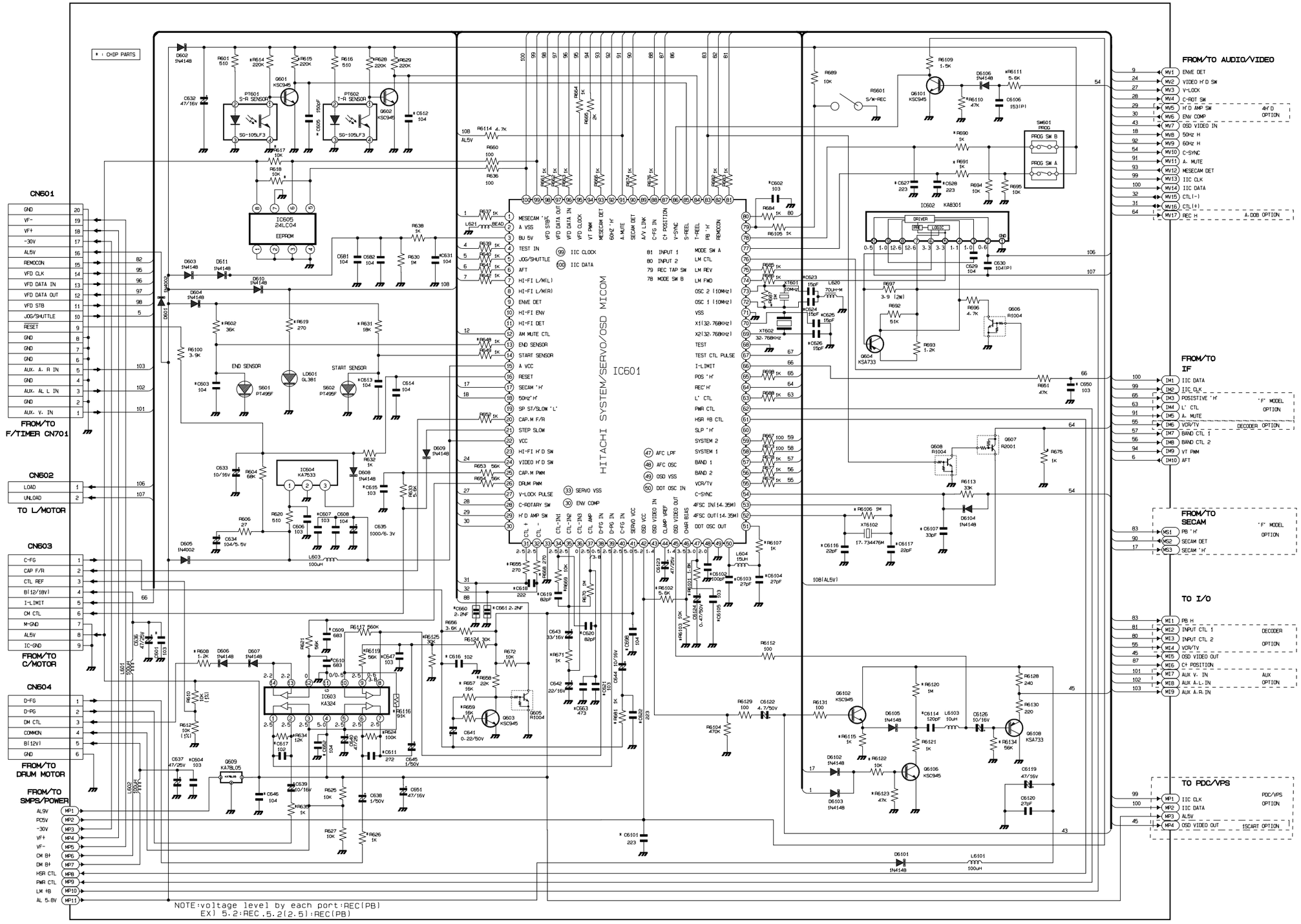

IC601 HD6433977-RA10F

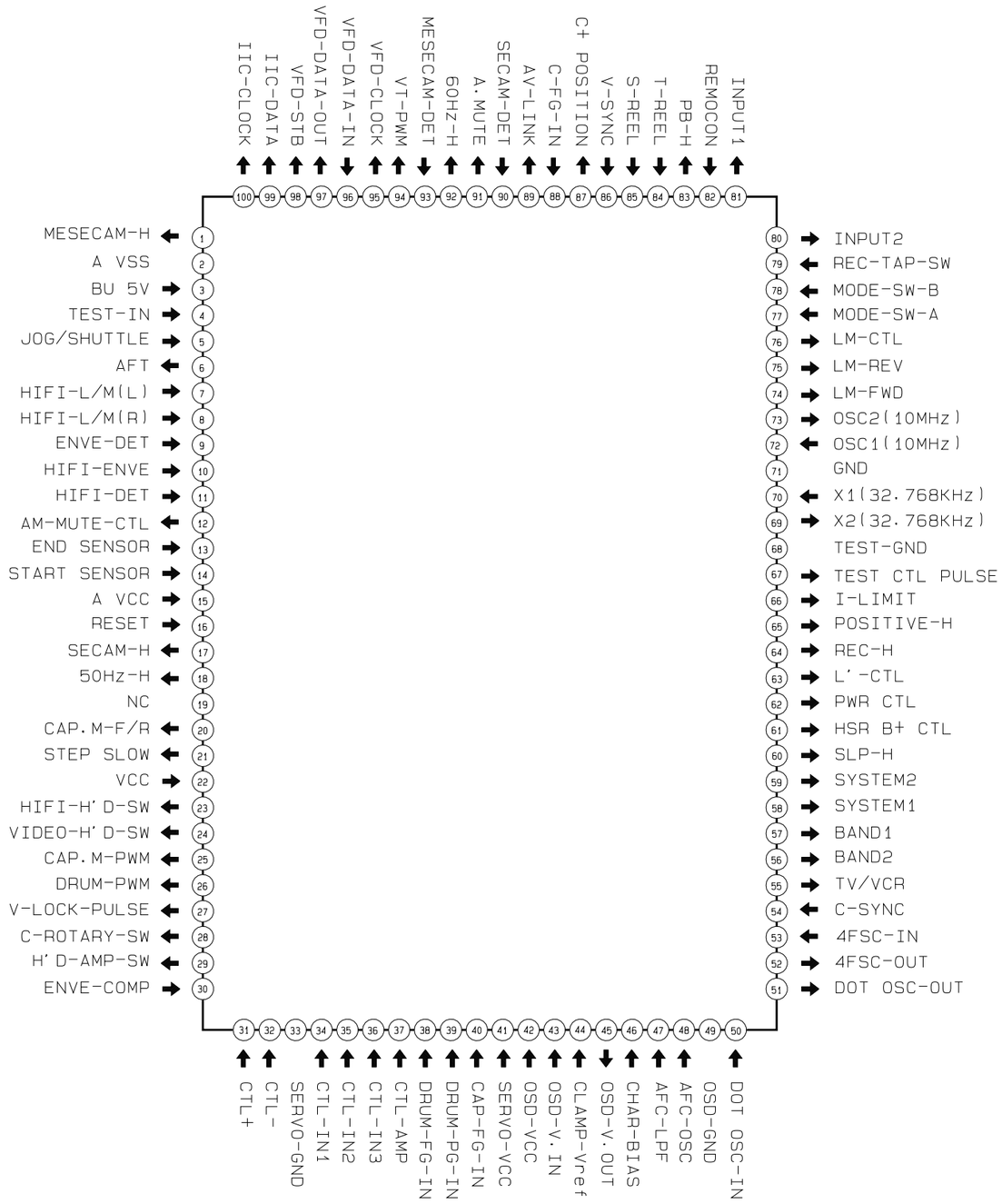

11-3 Audio/Video (SV-A20GK/A40GK/SV-200G/205G)

REC Y PROCESS
REC C PROCESS
PB Y PROCESS
PB C PROCESS
REC LINEAR AUDIO
PB LINEAR AUDIO

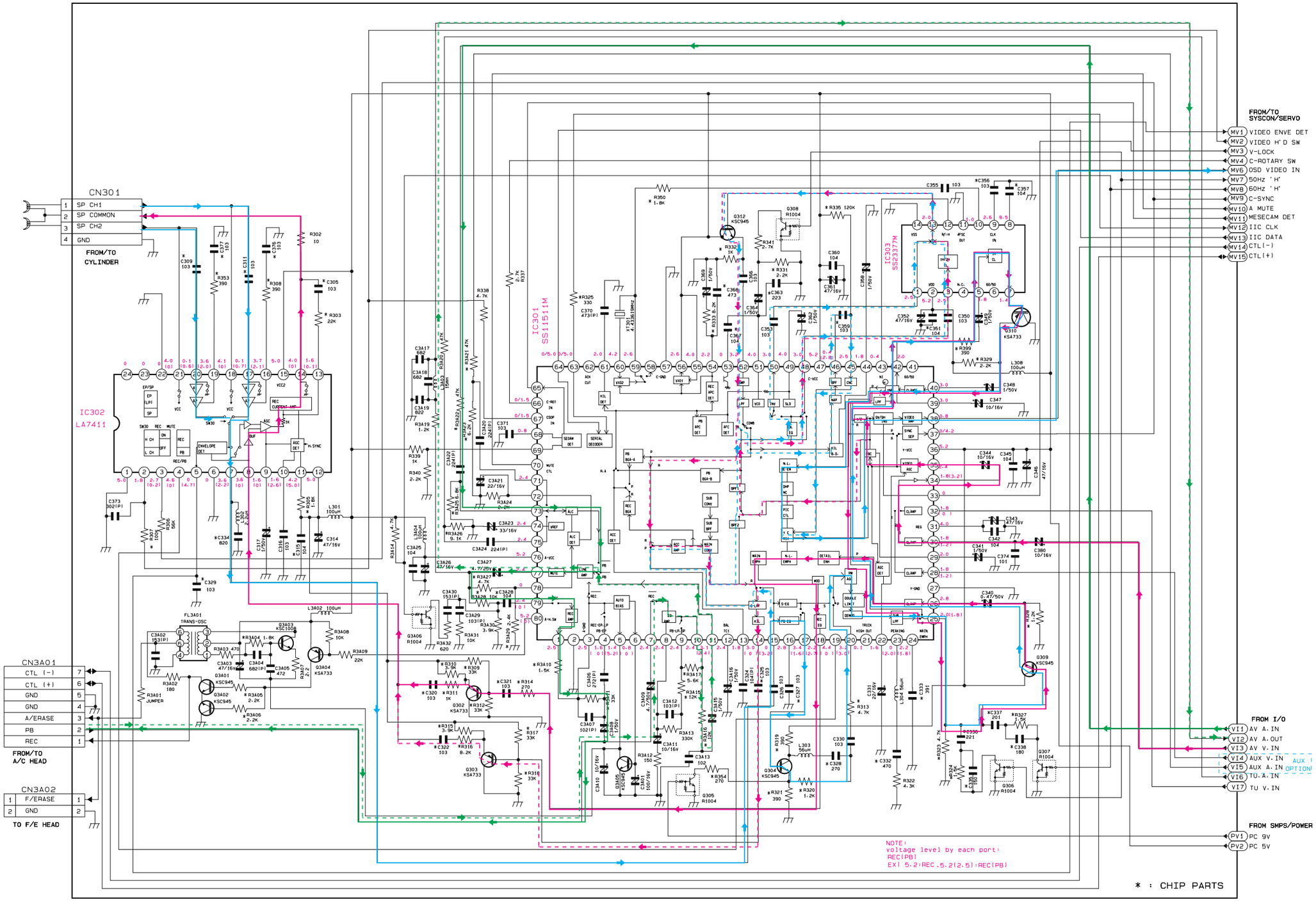

IC301 SS11511M

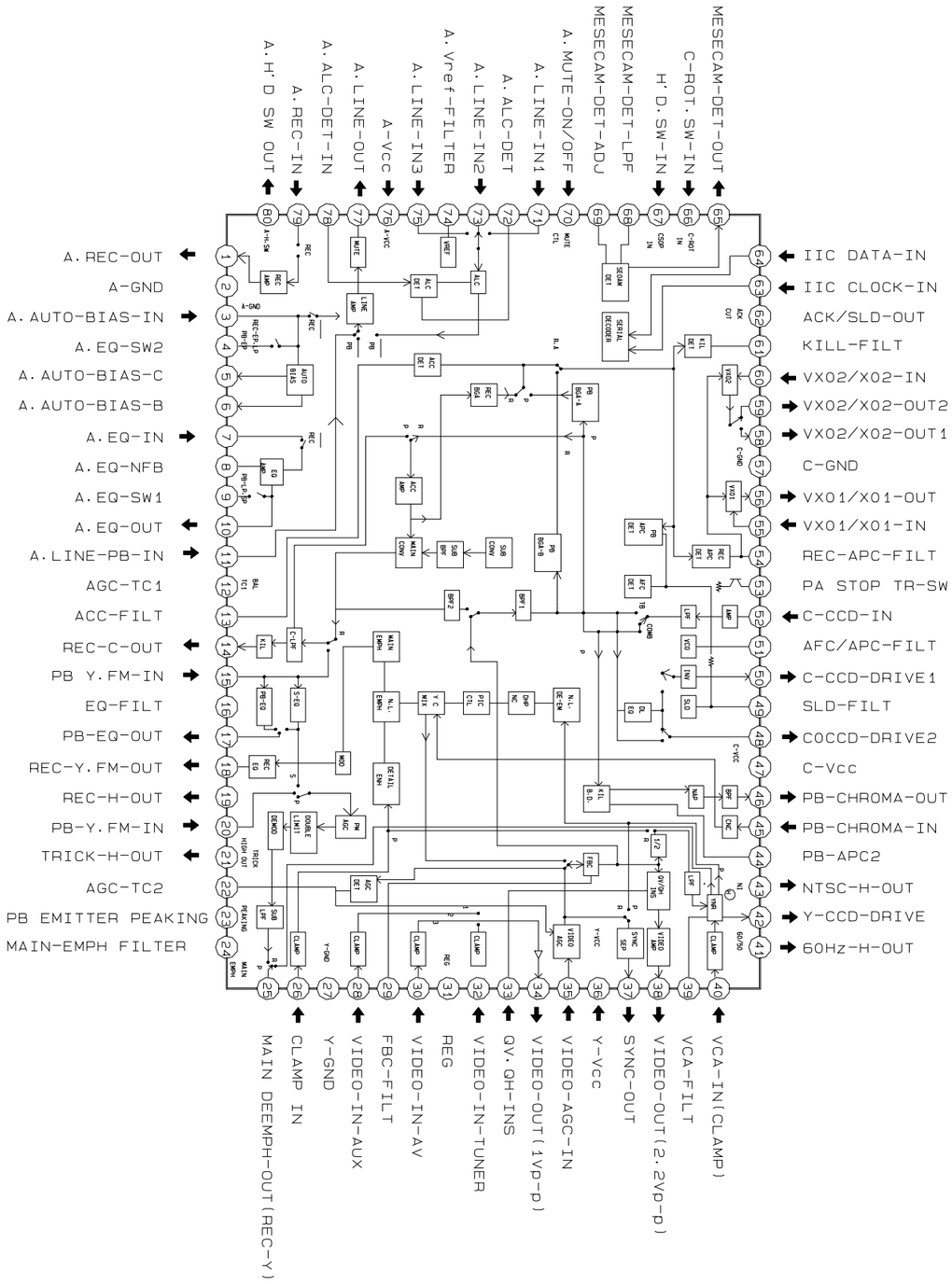

IC302 LA7411

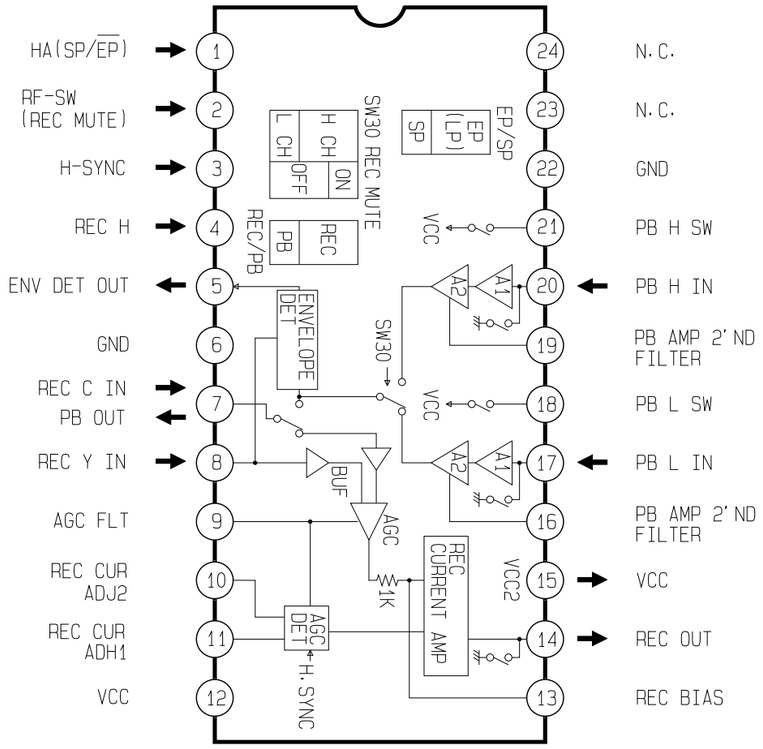

IC303 SS23377M

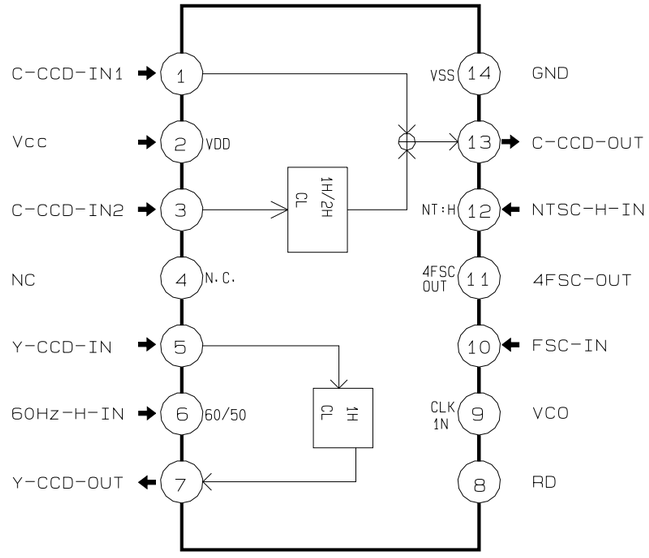

11-4 Audio/Video (SV-A60G/A80G/SV-400G/405G)

REC Y PROCESS
REC C PROCESS
PB Y PROCESS
PB C PROCESS
REC LINEAR AUDIO
PB LINEAR AUDIO

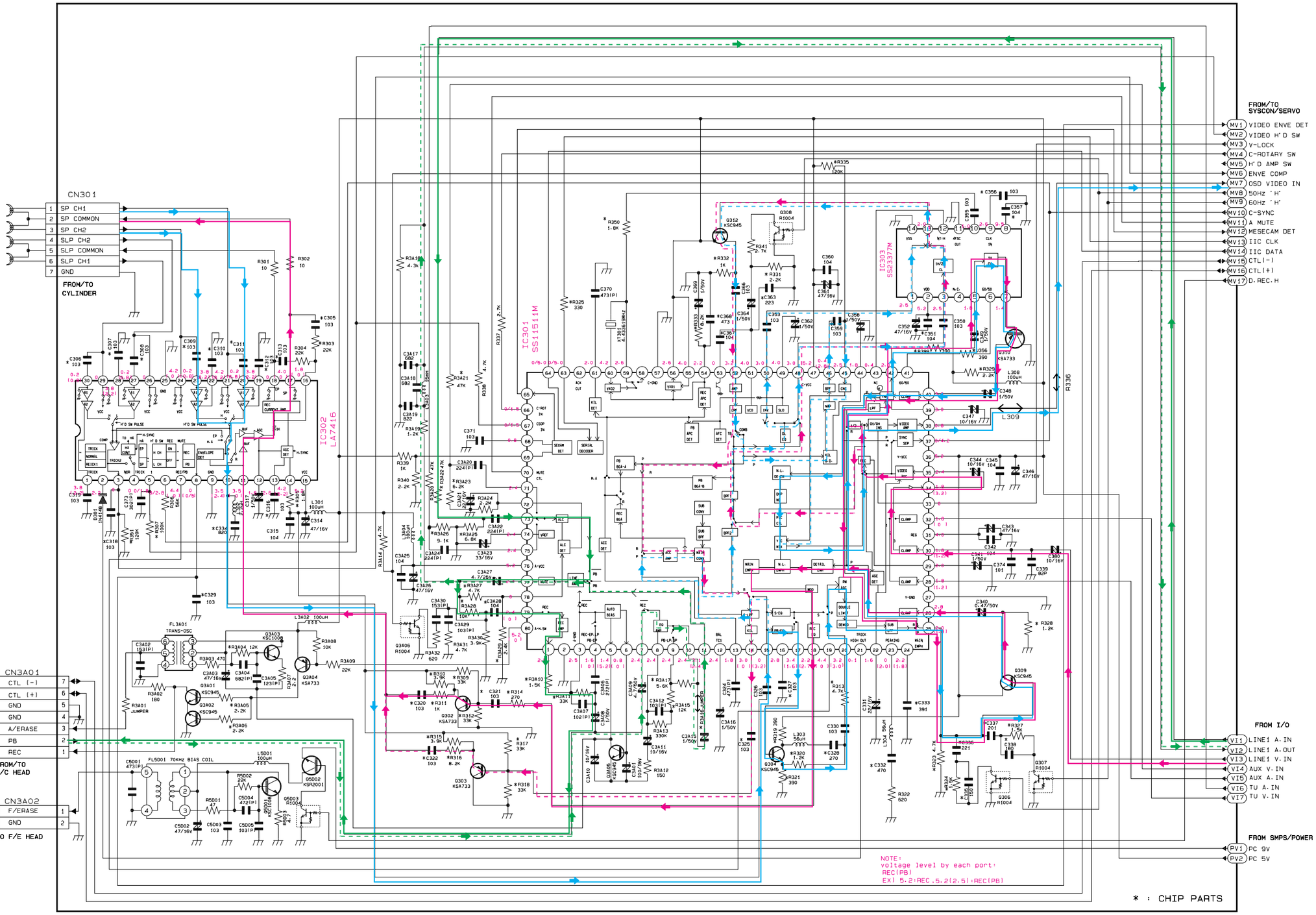

IC301 SS11511M

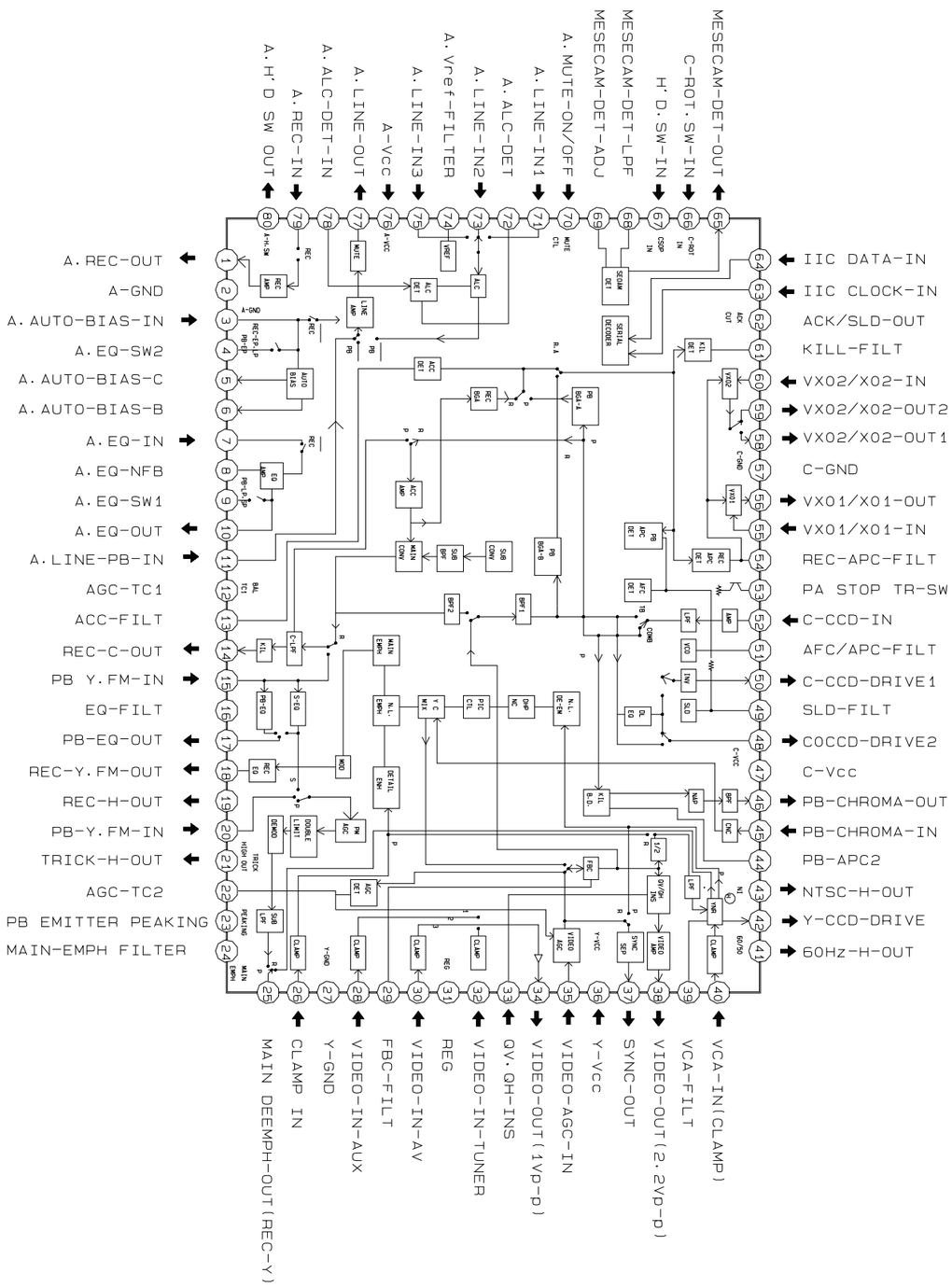

IC302 LA7416

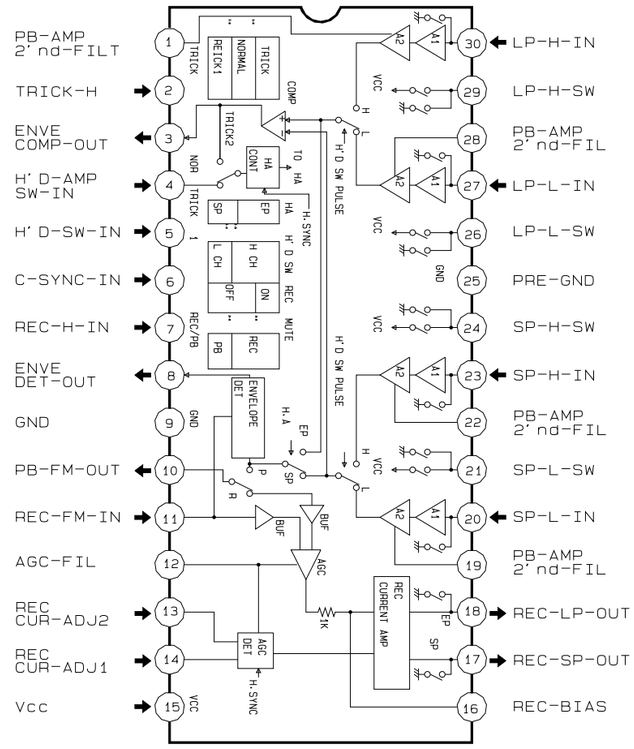

IC303 SS23377M

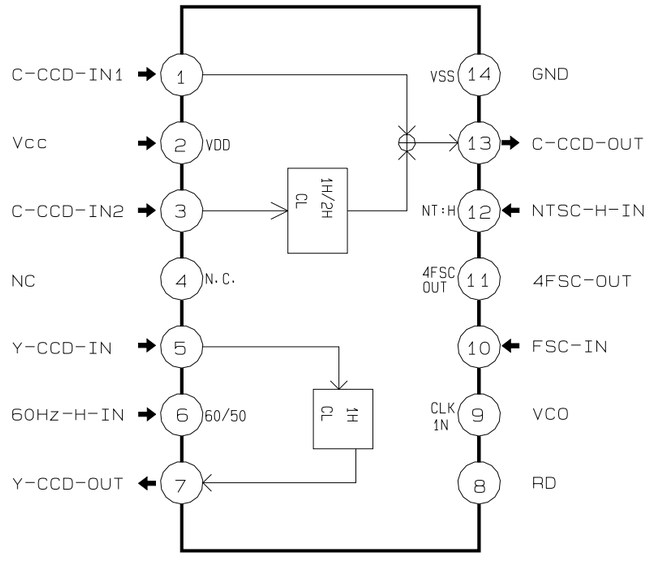

11-5 IF

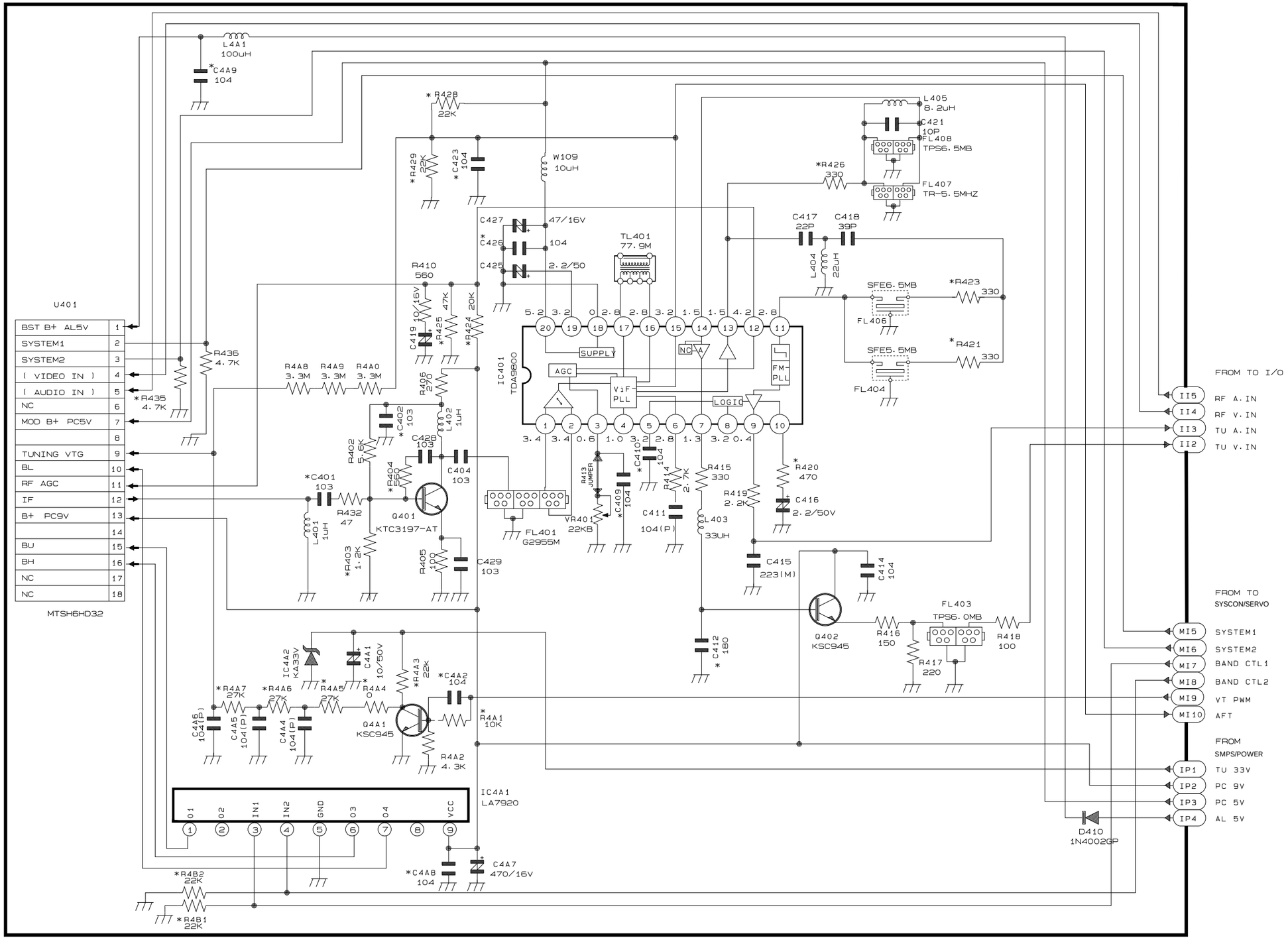
U401
BST B+ AL5V
SYSTEM1
SYSTEM2
(VIDEO IN)
(AUDIO IN)
NC
MOD B+ PC5V
TUNING VTG
BL
RF AGC
IF
B+ PC9V
BU
BH
NC
NC
MTSH6HD32
IC401
TDA9800
SUPPLY
AGC
VIF PLL
LOGIC
FM-PLL
TL401
77.9M
FL401
G2955M
VR401
22KB
Q401
KTC3197-AT
Q402
KSC945
Q4A1
KSC945
IC4A1
LA7920
FL403
TPS6.0MB
FL404
FL406
FL407
TR-5.5MHZ
FL408
TPS6.5MB
SFE6.5MB
SFE5.5MB
D410
1N4002GP
FROM TO I/O
RF A.IN
RF V.IN
TU A.IN
TU V.IN
FROM TO
SYSCON/SERVO
SYSTEM1
SYSTEM2
BAND CTL1
BAND CTL2
VT PWM
AFT
FROM
SMPS/POWER
TU 33V
PC 9V
PC 5V
AL 5V

IC401 TDA9800

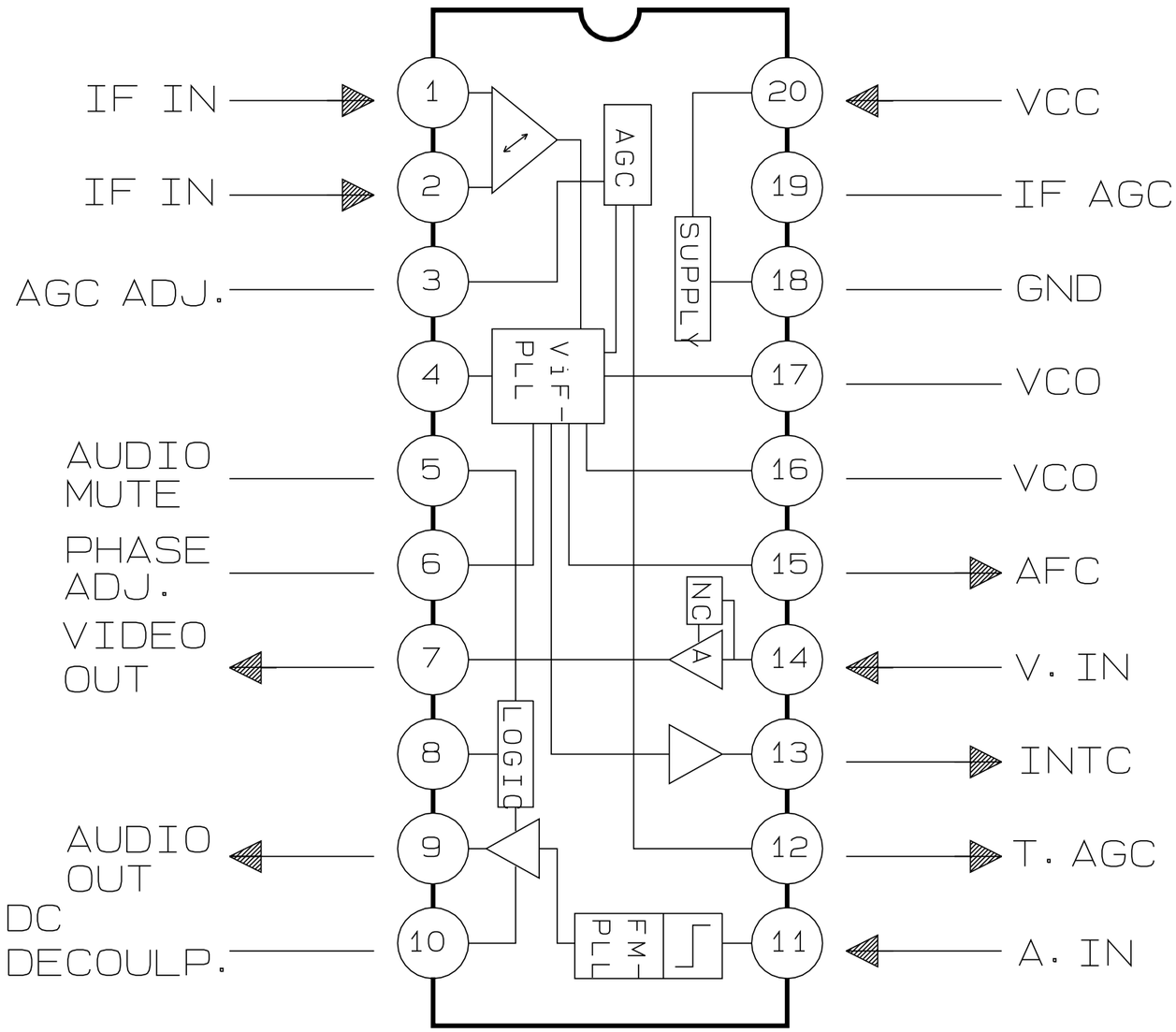

11-6 I/O

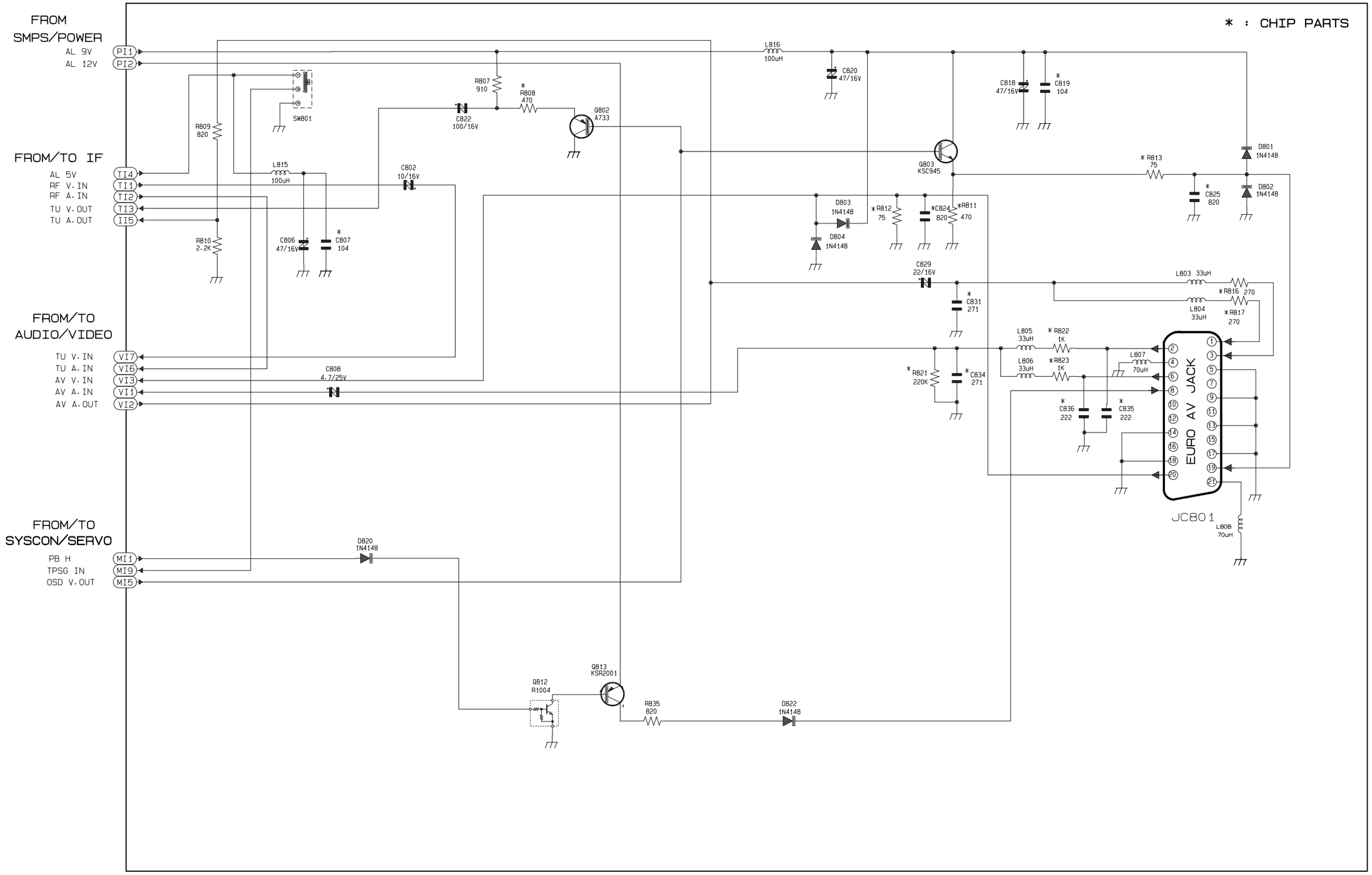
* : CHIP PARTS
FROM SMPS/POWER
AL 9V
AL 12V
PI1
PI2
FROM/TO IF
AL 5V
RF V.IN
RF A.IN
TU V.OUT
TU A.OUT
TI4
TI1
TI2
TI3
II5
FROM/TO AUDIO/VIDEO
TU V.IN
TU A.IN
AV V.IN
AV A.IN
AV A.OUT
VI7
VI6
VI3
VI1
VI2
FROM/TO SYSCON/SERVO
PB H
TPSG IN
OSD V.OUT
MI1
MI9
MI5
SW801
R809 820
R810 2.2K
L815 100uH
C802 10/16V
C806 47/16V
*C807 104
R807 910
*R808 470
C822 100/16V
Q802 A733
L816 100uH
C820 47/16V
C818 47/16V
*C819 104
Q803 KSC945
D803 1N414B
D804 1N414B
*R812 75
*C824 820
*R811 470
*R813 75
*C825 820
D801 1N414B
D802 1N414B
C829 22/16V
*C831 271
L803 33uH
*R816 270
L804 33uH
*R817 270
L805 33uH
*R822 1K
L806 33uH
*R823 1K
L807 70uH
*R821 220K
*C834 271
*C836 222
*C835 222
C808 4.7/25V
D820 1N414B
Q812 R1004
Q813 KSR2001
R835 820
D822 1N414B
EURO AV JACK
JC801
L808 70uH

11-7 VPS

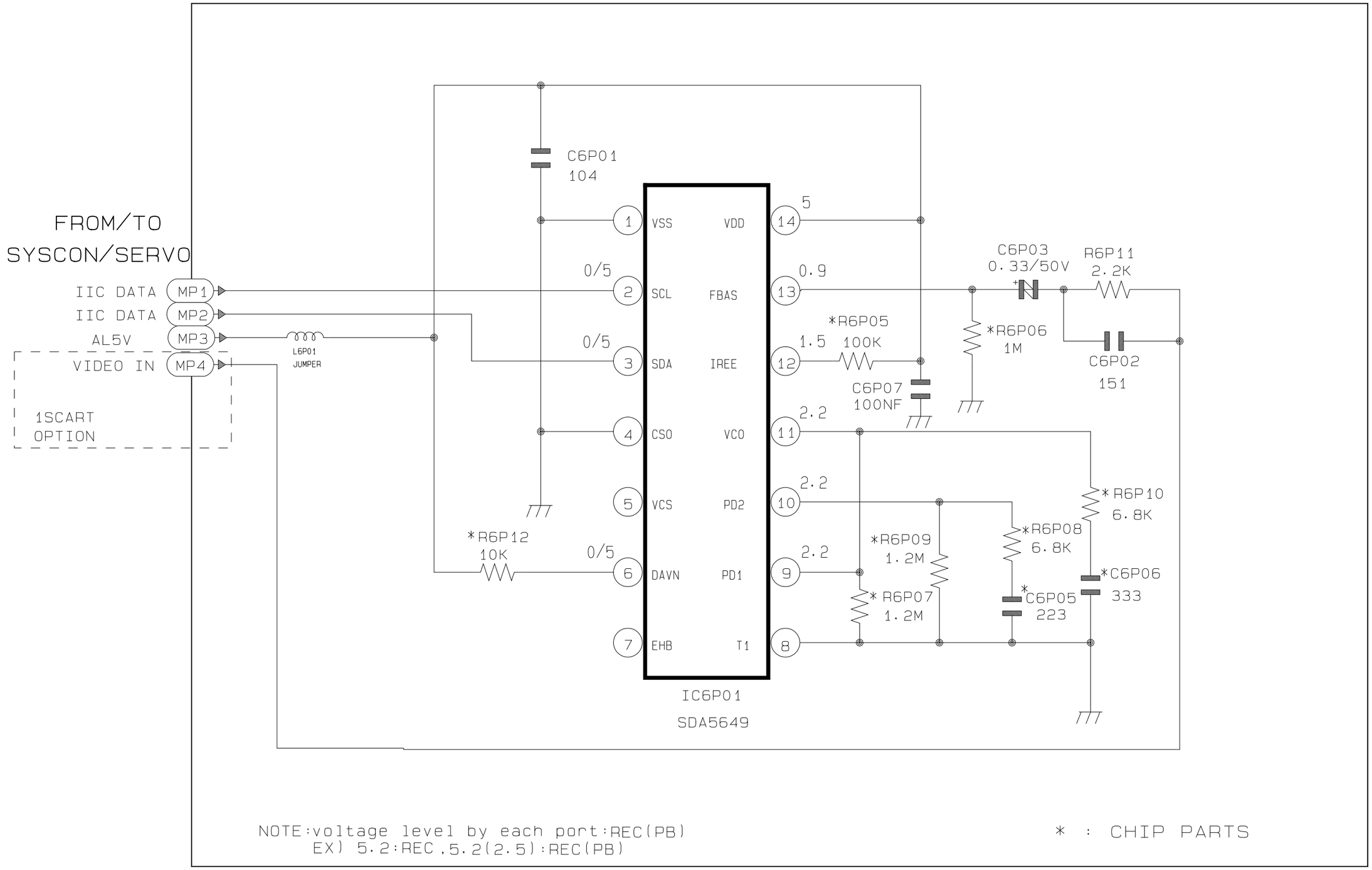
FROM/TO
SYSCON/SERVO
IIC DATA MP1
IIC DATA MP2
AL5V MP3
VIDEO IN MP4
1SCART
OPTION
L6P01
JUMPER
C6P01
104
1 VSS
2 SCL
3 SDA
4 CSO
5 VCS
6 DAVN
7 EHB
VDD 14
FBAS 13
IREE 12
VCO 11
PD2 10
PD1 9
T1 8
0/5
0/5
0/5
5
0.9
1.5
2.2
2.2
2.2
2.2
C6P03
0.33/50V
R6P11
2.2K
*R6P05
100K
*R6P06
1M
C6P02
151
C6P07
100NF
*R6P10
6.8K
*R6P08
6.8K
*R6P09
1.2M
*C6P06
333
*C6P05
223
*R6P07
1.2M
*R6P12
10K
IC6P01
SDA5649
NOTE:voltage level by each port:REC(PB)
EX) 5.2:REC,5.2(2.5):REC(PB)
* : CHIP PARTS

11-8 Function-Timer (SV-A20GK/SV-A60GK/SV-200G/SV-600G)

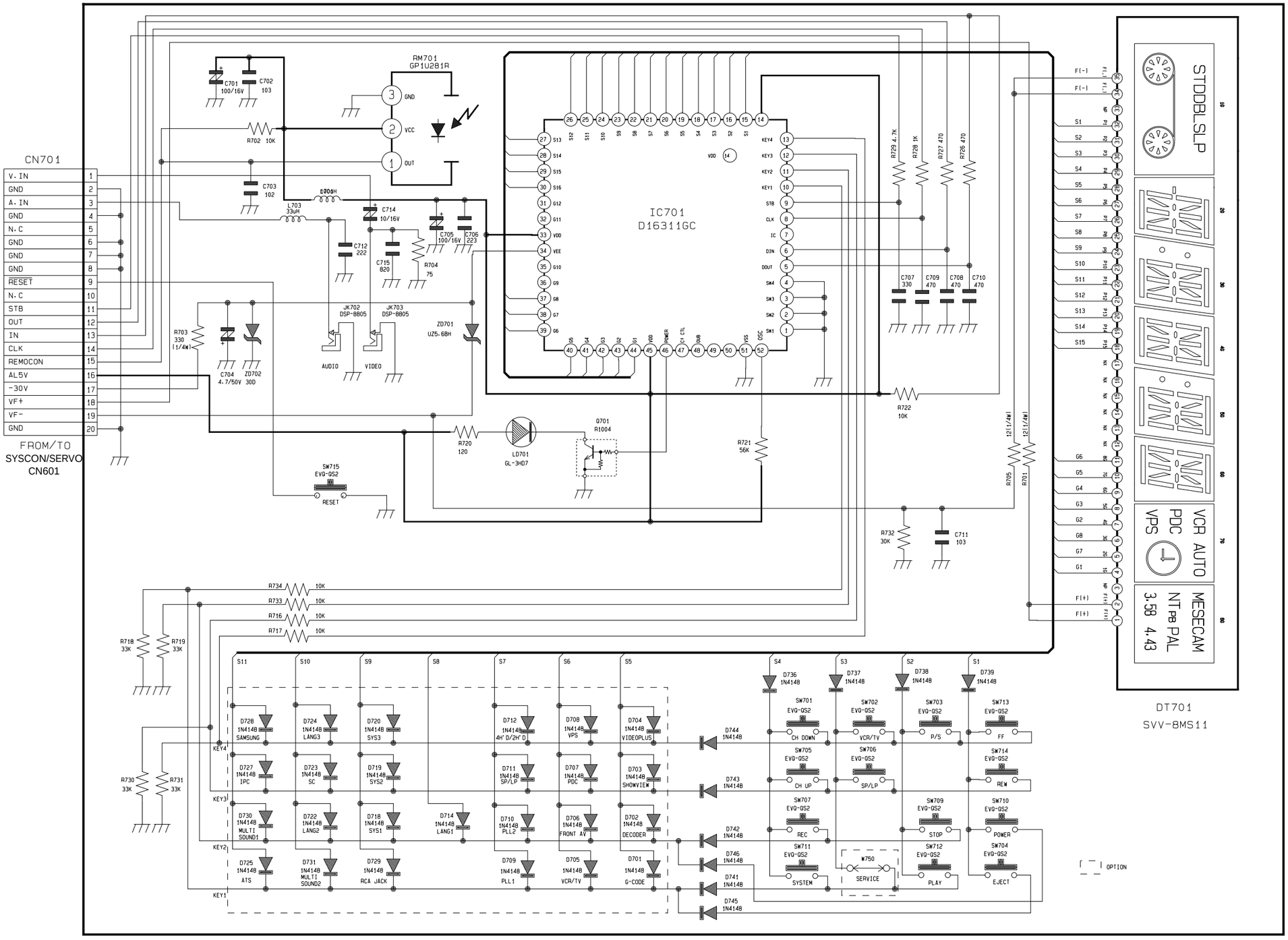

11-9 Function-Timer (SV-A40GK/SV-A80GK/SV-205G/SV-405G)

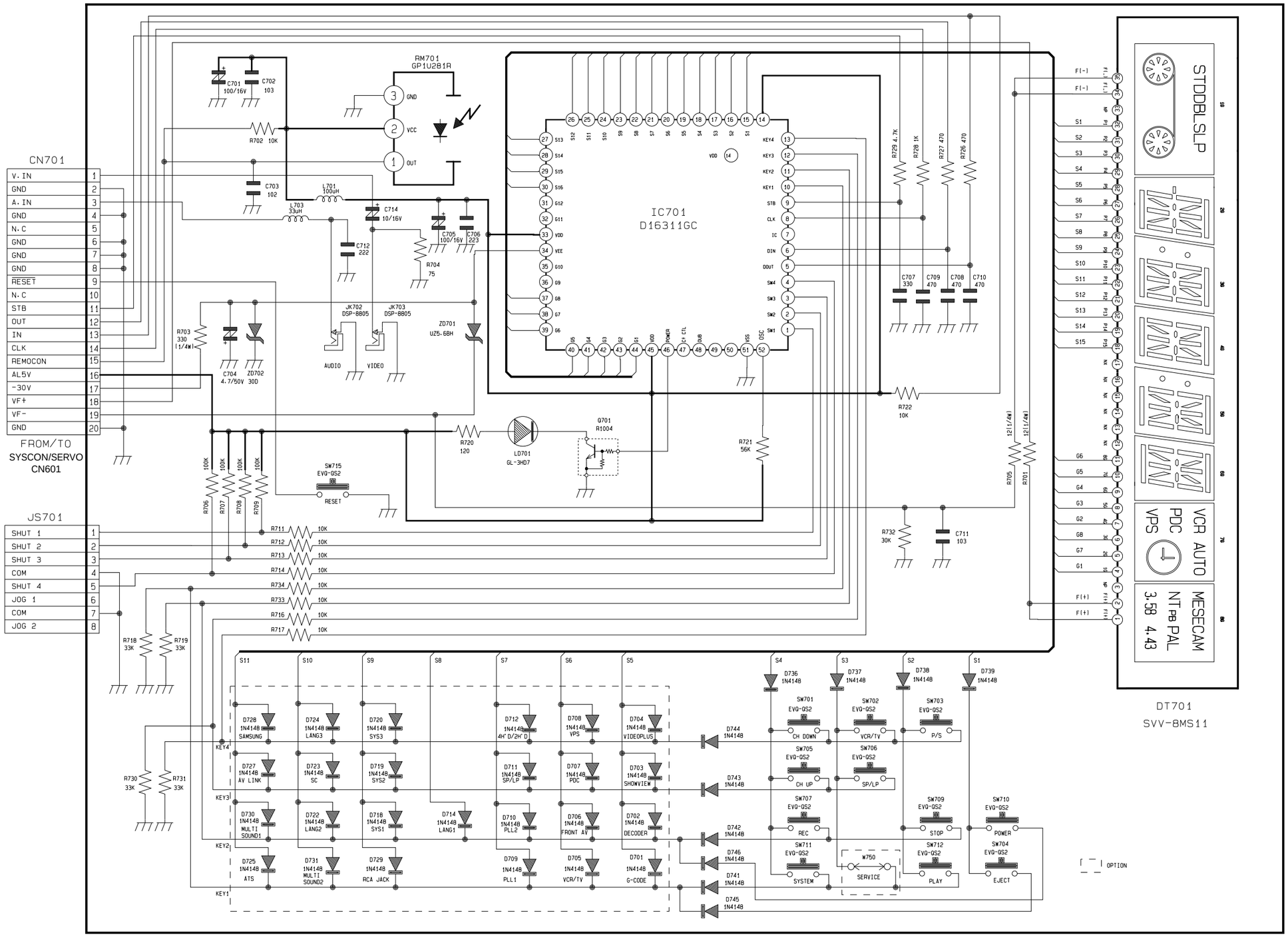

11-11 Remote-Control

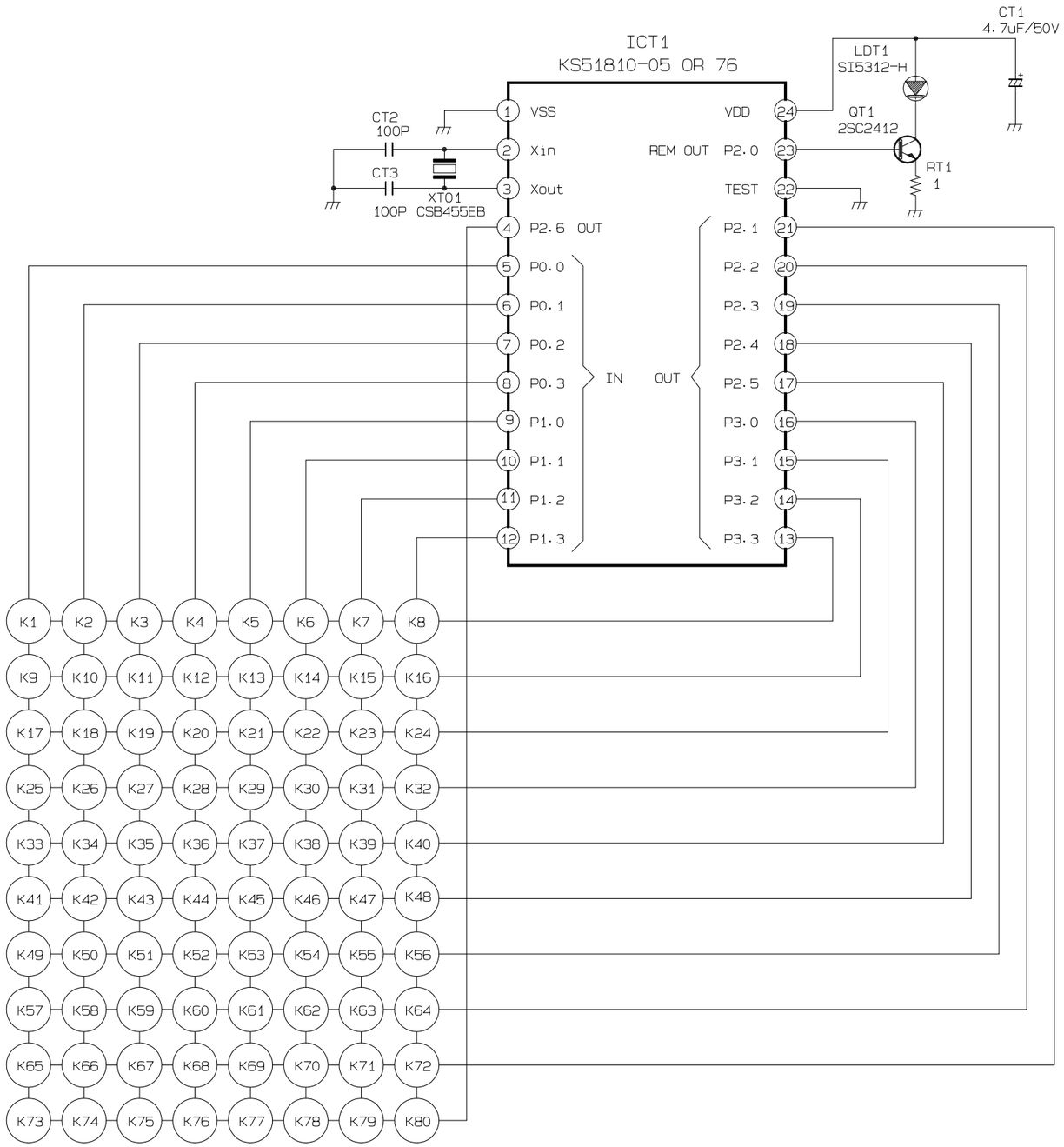

FUNCTION KEY			
K1	-	K41	REW
K2	TV/VCR	K42	PLAY
K3	POWER	K43	F.F
K4	-	K44	INDEX
K5	-	K45	-
K6	-	K46	OK
K7	TEST	K47	-
K8	INDEX	K48	-
K9	CH 1	K49	-
K10	CH 2	K50	CLEAR/RESET
K11	CH 3	K51	DISPLAY
K12	-	K52	MENU
K13	TRACKING UP	K53	SYSTEM
K14	TRACKING DOWN	K54	-
K15	A.DUB	K55	-
K16	-	K56	-
K17	CH 4	K57	EJECT
K18	CH 5	K58	D.ATR
K19	CH 6	K59	OUTPUT SEL.
K20	-	K60	-
K21	VCR+	K61	◁
K22	SEARCH	K62	AFT
K23	-	K63	PICTURE
K24	CLOCK/COUNTER	K64	-
K25	CH 7	K65	INPUT SEL.
K26	CH 8	K66	SHIFT
K27	CH 9	K67	-
K28	-	K68	-
K29	-	K69	▷
K30	-	K70	-
K31	-	K71	SHUTTLE-
K32	-	K72	SHUTTLE+
K33	REC/OTR	K73	CH-DOWN
K34	STOP	K74	CH 0
K35	P/STILL	K75	CH-UP
K36	SLOW-DOWN	K76	SLOW+
K37	-	K77	VPS/PDC
K38	▽	K78	-
K39	△	K79	SP/LP
K40	-	K80	Q-PROGRAM