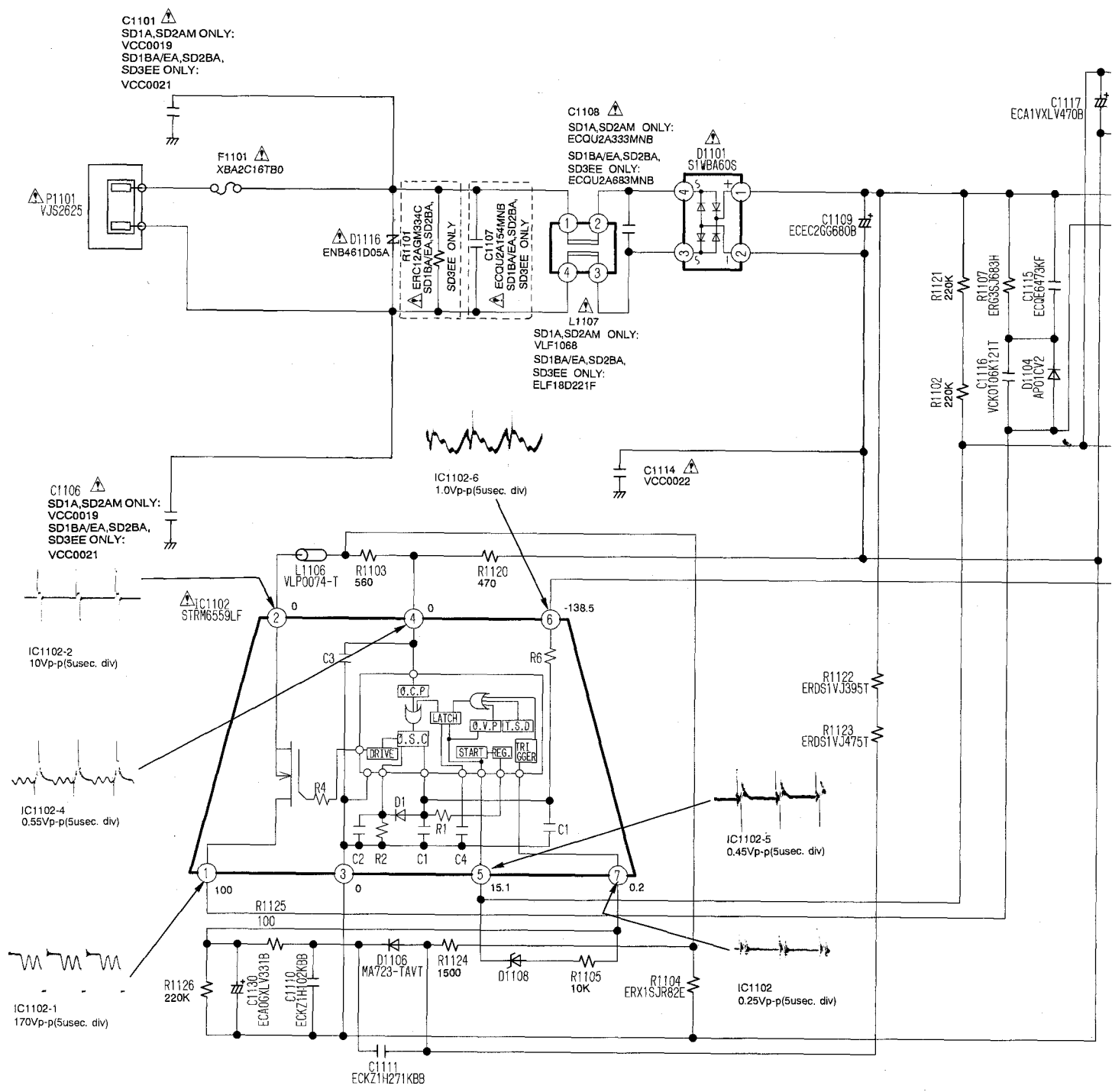
C1101
SD1A,SD2AM ONLY:
VCC0019
SD1BA/EA,SD2BA,
SD3EE ONLY:
VCC0021
F1101
XBA2C16TB0
P1101
VJS2625
D1116
ENB461D05A
R1101
ERC12A3M334C
SD1BA/EA,SD2BA,
SD3EE ONLY
C1107
ECQU2A154MNB
SD1BA/EA,SD2BA,
SD3EE ONLY
C1108
SD1A,SD2AM ONLY:
ECQU2A333MNB
SD1BA/EA,SD2BA,
SD3EE ONLY:
ECQU2A683MNB
D1101
S1WBA60S
C1109
ECEC2GG680B
C1117
ECA1VXLV470B
R1121
220K
R1107
ERG3SJ683H
C1115
ECQE6473KF
R1102
220K
C1116
VCKO106K121T
D1104
APOICV2
L1107
SD1A,SD2AM ONLY:
VLF1068
SD1BA/EA,SD2BA,
SD3EE ONLY:
ELF18D221F
C1114
VCC0022
C1106
SD1A,SD2AM ONLY:
VCC0019
SD1BA/EA,SD2BA,
SD3EE ONLY:
VCC0021
IC1102-6
1.0Vp-p(5usec. div)
L1106
VLP0074-T
R1103
560
R1120
470
IC1102
STRM6559LF
IC1102-2
10Vp-p(5usec. div)
C3
R6
O.C.P
LATCH
O.V.P
T.S.D
O.S.C
DRIVE
START
REG.
TRI
GGER
R4
D1
R1
C1
C2
R2
C4
IC1102-4
0.55Vp-p(5usec. div)
R1122
ERDS1VJ395T
R1123
ERDS1VJ475T
IC1102-5
0.45Vp-p(5usec. div)
R1125
100
R1126
220K
C1130
ECA0GXLV331B
C1110
ECKZ1H102KBB
D1106
MA723-TAVT
R1124
1500
D1108
R1105
10K
R1104
ERX1SJR82E
IC1102
0.25Vp-p(5usec. div)
IC1102-1
170Vp-p(5usec. div)
C1111
ECKZ1H271KBB
0
-138.5
100
15.1
0.2

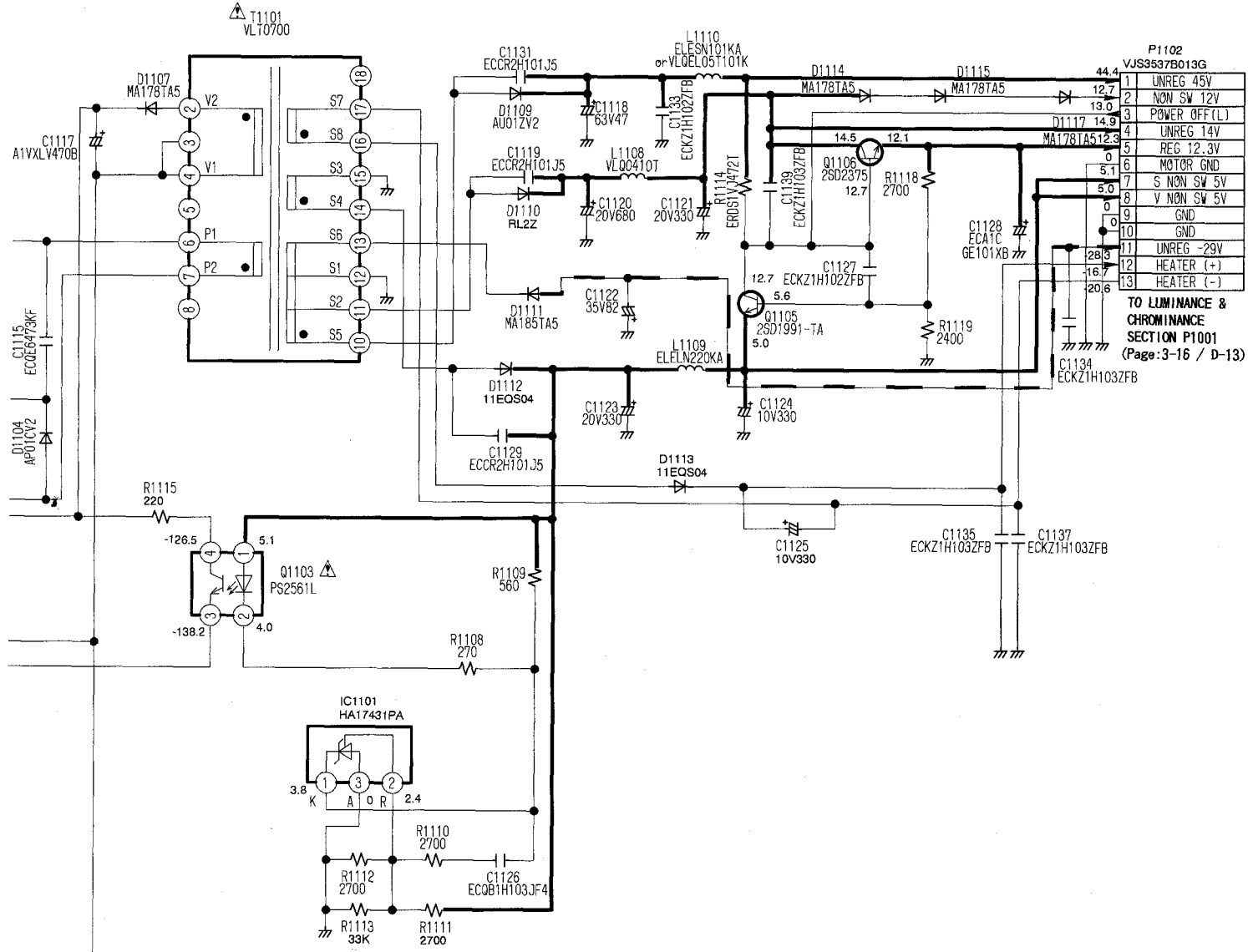

IMPORTANT SAFETY NOTICE:
COMPONENTS IDENTIFIED WITH THE MARK ⚠ HAVE THE SPECIAL CHARACTERISTICS FOR SAFETY. WHEN REPLACING ANY OF THESE COMPONENTS, USE ONLY THE SAME TYPE.

NOTE: DO NOT USE ANY PART NUMBER SHOWN ON THIS SCHEMATIC DIAGRAM FOR ORDERING. WHEN YOU ORDER A PART, PLEASE REFER TO PARTS LIST.

SYSTEM CONTROL & SERVO SECTION IN MAIN SCHEMATIC DIAGRAM

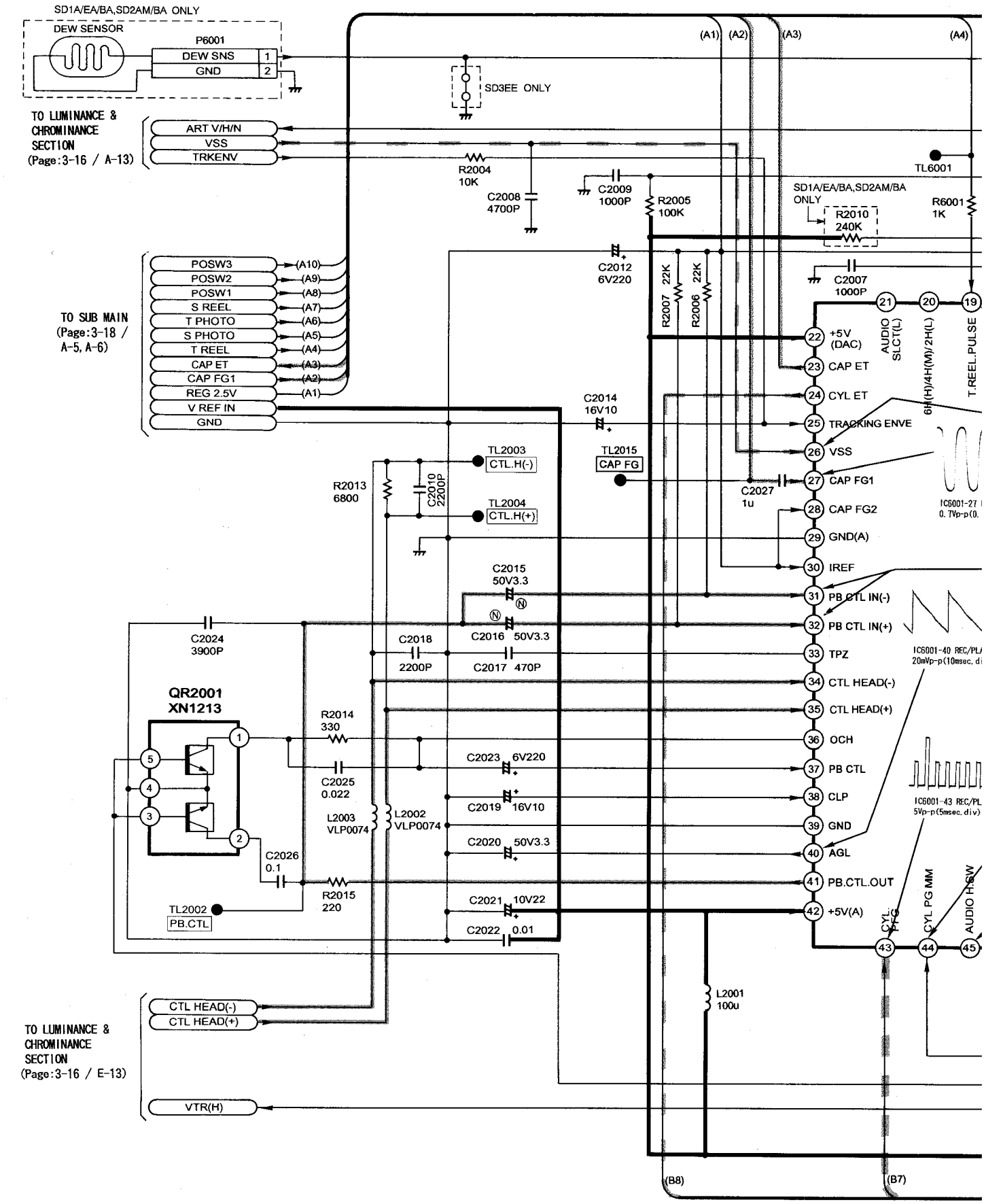

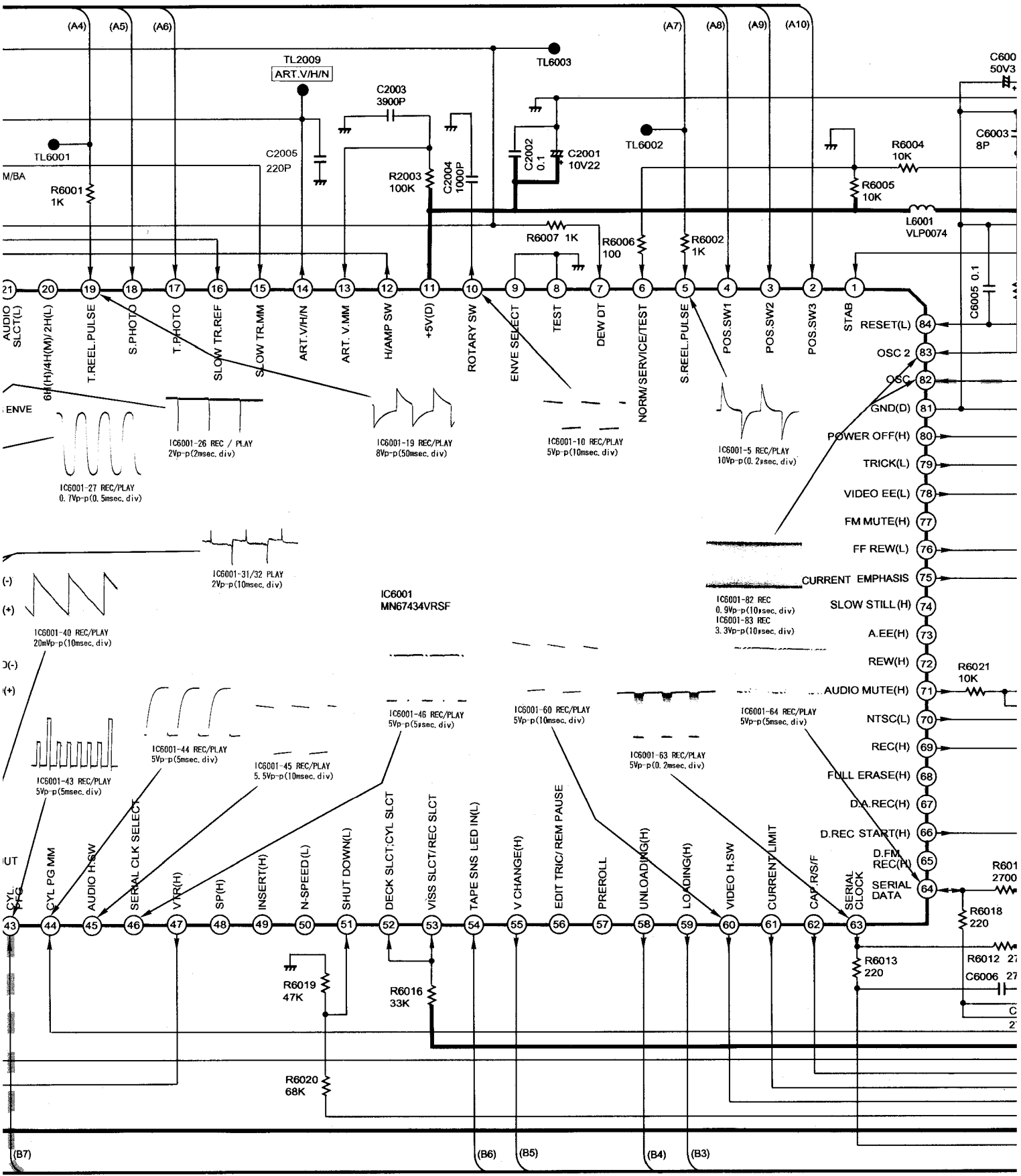
(A4)
(A5)
(A6)
(A7)
(A8)
(A9)
(A10)
TL2009
ART.V/H/N
TL6003
TL6001
TL6002
C2003
3900P
C2005
220P
C2002
0.1
C2001
10V22
C2004
1000P
R2003
100K
R6001
1K
R6004
10K
R6005
10K
L6001
VLP0074
R6007 1K
R6006
100
R6002
1K
C6005 0.1
C6003
8P
M/BA
AUDIO SLCT(L)
6H(H)/4H(M)/2H(L)
T.REEL.PULSE
S.PHOTO
T.PHOTO
SLOW TR.REF
SLOW TR.MM
ART.V/H/N
ART. V.MM
H/AMP SW
+5V(D)
ROTARY SW
ENVE SELECT
TEST
DEW DT
NORM/SERVICE/TEST
S.REEL.PULSE
POS.SW1
POS.SW2
POS.SW3
STAB
RESET(L)
OSC 2
OSC
GND(D)
POWER OFF(H)
TRICK(L)
VIDEO EE(L)
FM MUTE(H)
FF REW(L)
CURRENT EMPHASIS
SLOW STILL(H)
A.EE(H)
REW(H)
AUDIO MUTE(H)
NTSC(L)
REC(H)
FULL ERASE(H)
D.A.REC(H)
D.REC START(H)
D.FM REC(H)
SERIAL DATA
SERIAL CLOCK
CAP.R/S/F
CURRENT LIMIT
VIDEO H.SW
LOADING(H)
UNLOADING(H)
PREROLL
EDIT TRIC/ REM PAUSE
V CHANGE(H)
TAPE SNS LED IN(L)
VISS SLCT/REC SLCT
DECK SLCT;CYL SLCT
SHUT DOWN(L)
N-SPEED(L)
INSERT(H)
SP(H)
V.RR(H)
SERIAL CLK SELECT
AUDIO H.SW
CYL P/G MM
CYL
IC6001
MN67434VRSF
IC6001-26 REC / PLAY
2Vp-p(2msec. div)
IC6001-19 REC/PLAY
8Vp-p(50msec. div)
IC6001-10 REC/PLAY
5Vp-p(10msec. div)
IC6001-5 REC/PLAY
10Vp-p(0.2msec. div)
IC6001-27 REC/PLAY
0.7Vp-p(0.5msec. div)
IC6001-31/32 PLAY
2Vp-p(10msec. div)
IC6001-40 REC/PLAY
20mVp-p(10msec. div)
IC6001-82 REC
0.9Vp-p(10msec. div)
IC6001-83 REC
3.3Vp-p(10msec. div)
IC6001-46 REC/PLAY
5Vp-p(5msec. div)
IC6001-60 REC/PLAY
5Vp-p(10msec. div)
IC6001-64 REC/PLAY
5Vp-p(5msec. div)
IC6001-44 REC/PLAY
5Vp-p(5msec. div)
IC6001-45 REC/PLAY
5.5Vp-p(10msec. div)
IC6001-63 REC/PLAY
5Vp-p(0.2msec. div)
IC6001-43 REC/PLAY
5Vp-p(5msec. div)
R6021
10K
R6018
220
R6013
220
R6019
47K
R6016
33K
R6020
68K
(B7)
(B6)
(B5)
(B4)
(B3)

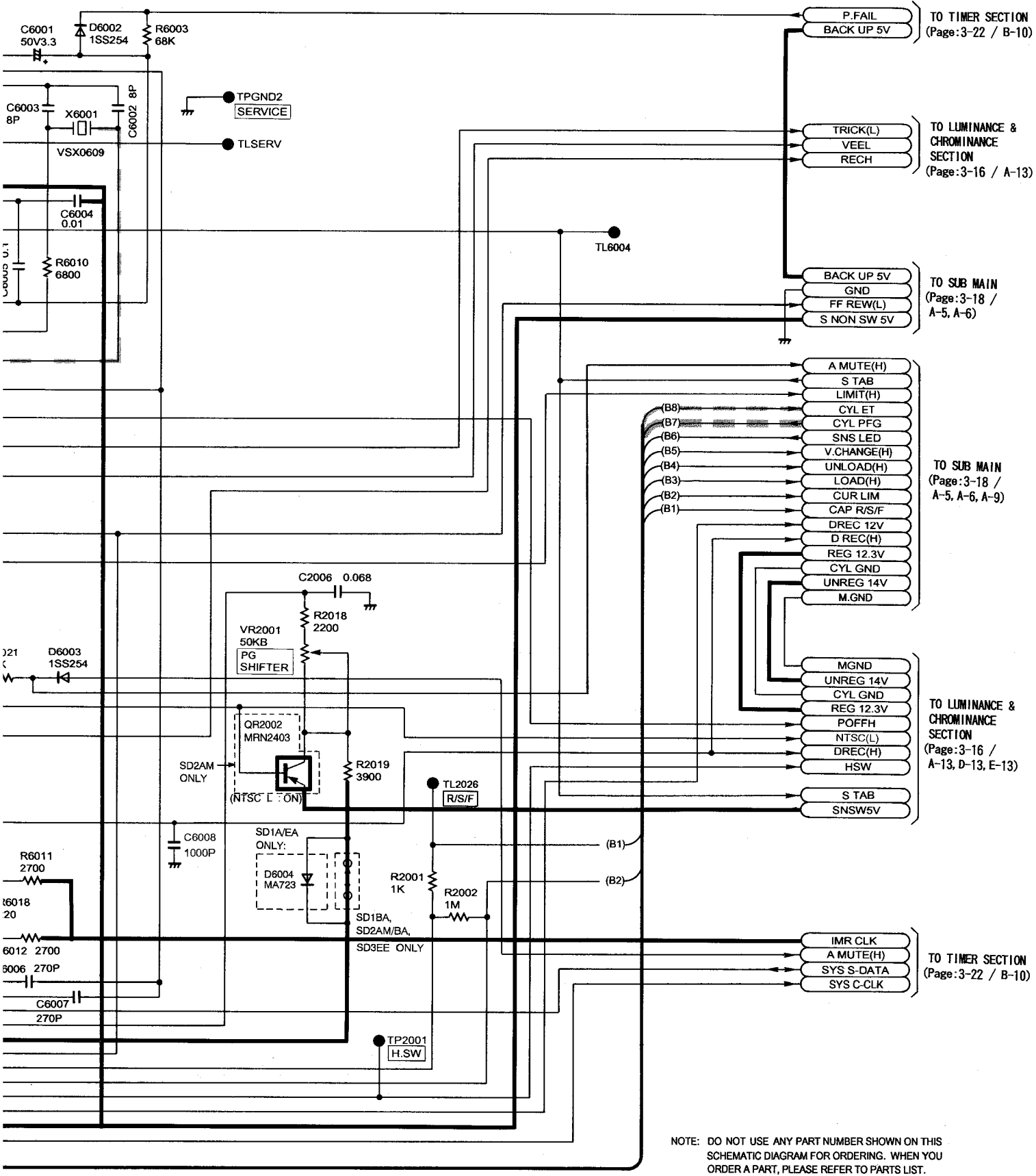

NOTE: DO NOT USE ANY PART NUMBER SHOWN ON THIS SCHEMATIC DIAGRAM FOR ORDERING. WHEN YOU ORDER A PART, PLEASE REFER TO PARTS LIST.

LUMINANCE & CHROMINANCE SECTION IN MAIN SCHEMATIC DIAGRAM

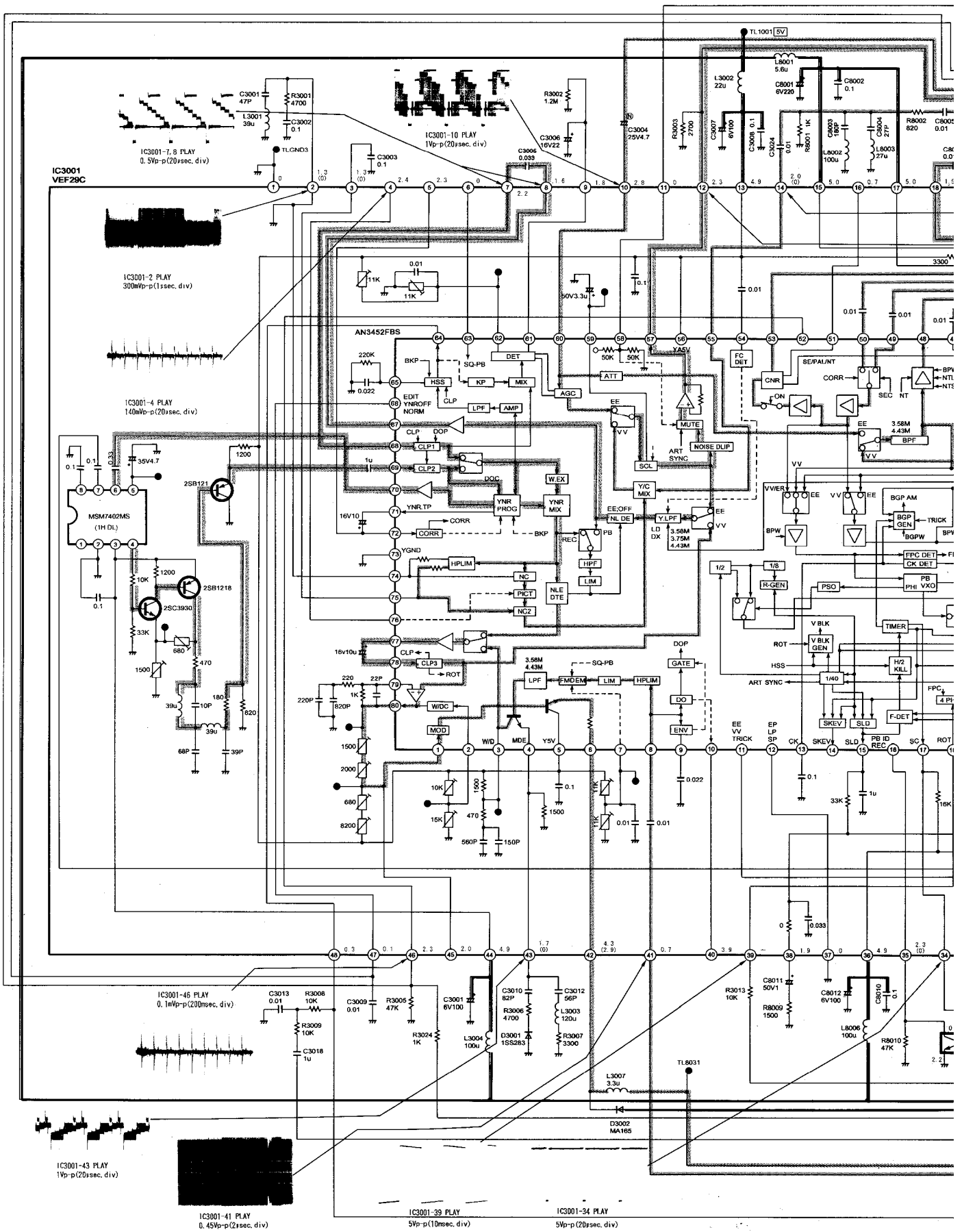

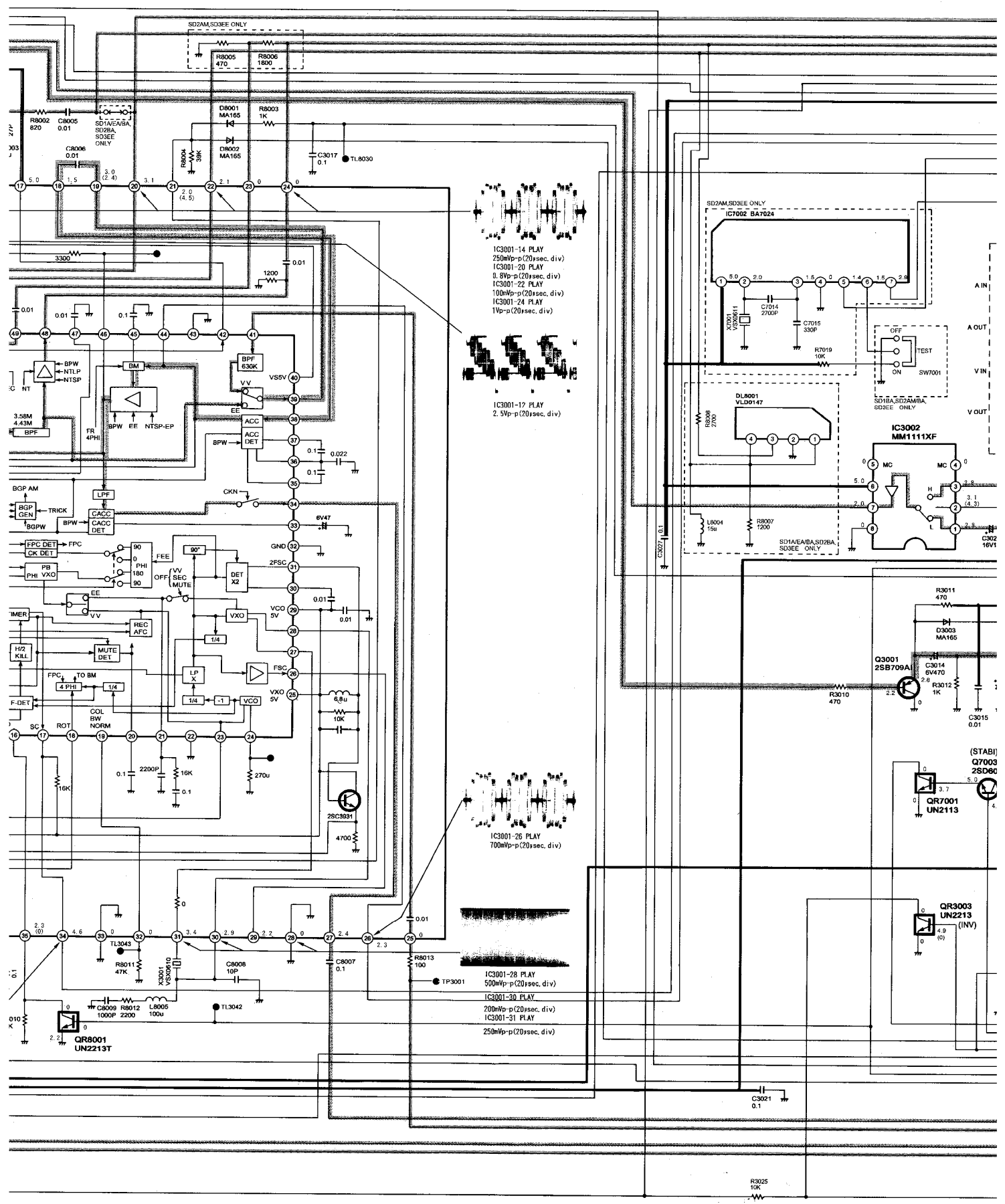
SD2AM,SD3EE ONLY
R8005 470
R8006 1800
R8002 820
C8005 0.01
SD1A/EA/BA, SD2BA, SD3EE ONLY
D8001 MA165
R8003 1K
D8002 MA165
R8004 39K
C8006 0.01
C3017 0.1
TL8030
3300
1200
0.01
BPW
NTLP
NTSP
BM
BPF 630K
VS5V
VV
EE
ACC
ACC DET
3.58M 4.43M
BPF
FR 4PHI
BPW EE NTSP-EP
0.022
BGP AM
BGP GEN
TRICK
BGPW
LPF
CACC
CACC DET
CKN
6V47
FPC DET
CK DET
FPC
PB PHI VXO
PHI
FEE
90°
DET X2
GND
2FSC
OFF
VV SEC MUTE
VCO 5V
VXO
REC AFC
1/4
MUTE DET
H/2 KILL
LP X
FSC
TO BM
4 PHI
F-DET
-1
VCO
VXO 5V
6.8u
10K
COL BW NORM
SG
ROT
2200P
16K
270u
2SC3931
4700
TL3043
R8011 47K
X3001 VS0010
C8008 10P
C8007 0.1
R8013 100
TP3001
C8009 1000P
R8012 2200
L8005 100u
TL3042
QR8001 UN2213T
IC3001-14 PLAY
250mVp-p(20μsec. div)
IC3001-20 PLAY
0.8Vp-p(20μsec. div)
IC3001-22 PLAY
100mVp-p(20μsec. div)
IC3001-24 PLAY
1Vp-p(20μsec. div)
IC3001-17 PLAY
2.5Vp-p(20μsec. div)
IC3001-26 PLAY
700mVp-p(20μsec. div)
IC3001-28 PLAY
500mVp-p(20μsec. div)
IC3001-30 PLAY
200mVp-p(20μsec. div)
IC3001-31 PLAY
250mVp-p(20μsec. div)
SD2AM,SD3EE ONLY
IC7002 BA7024
C7014 2700P
X7001 VS0611
C7015 330P
R7019 10K
OFF
TEST
ON
SW7001
SD1BA,SD2AM/BA, SD3EE ONLY
A IN
A OUT
V IN
V OUT
DL8001 VLD0147
R8008 2700
IC3002 MM1111XF
MC
H
L
L8004 15u
R8007 1200
SD1A/EA/BA,SD2BA SD3EE ONLY
C3027 0.1
R3011 470
D3003 MA165
Q3001 2SB709A
C3014 6V470
R3012 1K
R3010 470
C3015 0.01
QR7001 UN2113
QR3003 UN2213 (INV)
C3021 0.1
R3025 10K

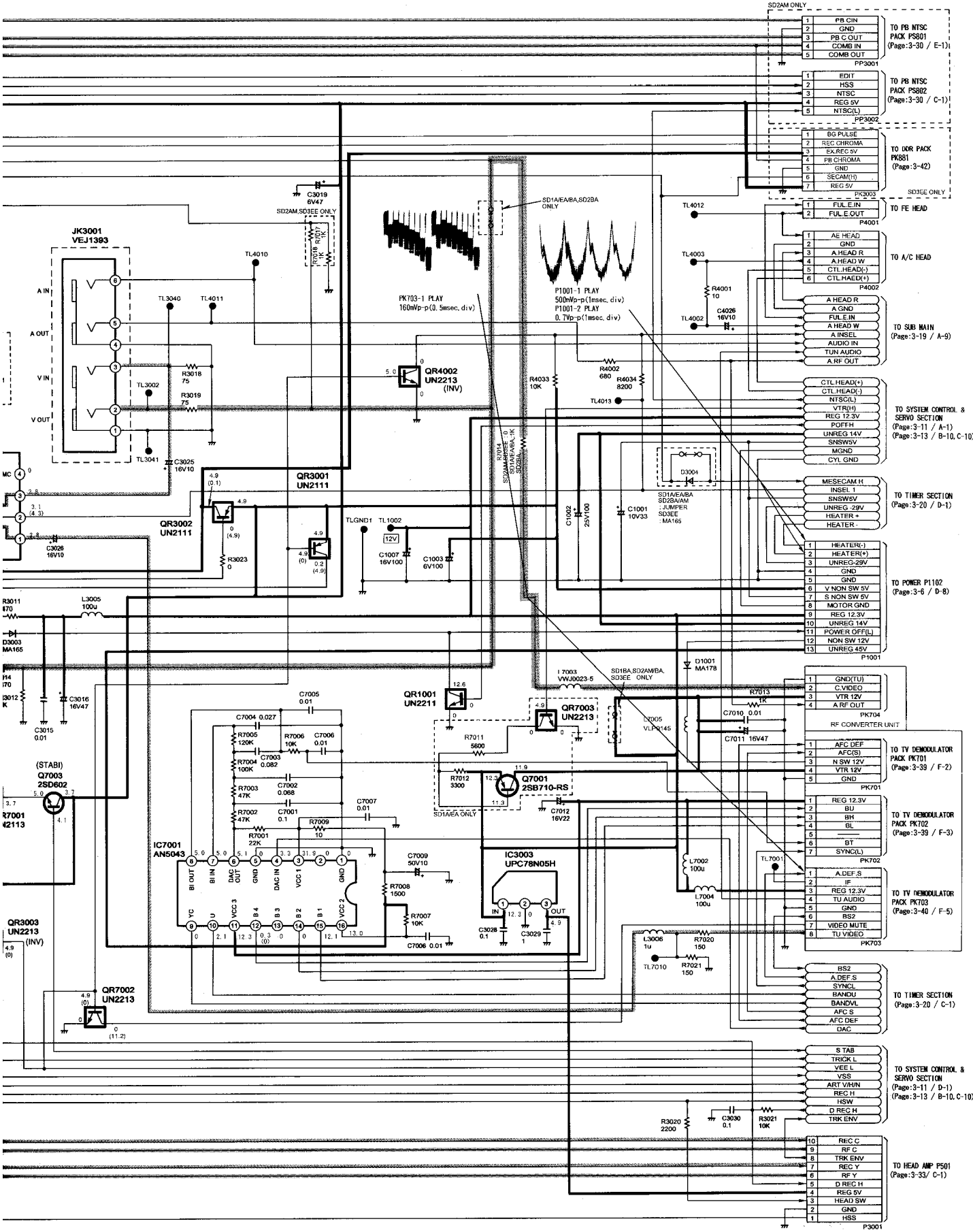
SD2AM ONLY
PB CIN
GND
PB C OUT
COMB IN
COMB OUT
PP3001
TO PB NTSC PACK PS801 (Page:3-30 / E-1)
EDIT
HSS
NTSC
REG 5V
NTSC(L)
PP3002
TO PB NTSC PACK PS802 (Page:3-30 / C-1)
BG PULSE
REC CHROMA
EX.REC 5V
PB CHROMA
GND
SECAM(H)
REG 5V
PK3003
SD3EE ONLY
TO DDR PACK PK881 (Page:3-42)
FUL.E.IN
FUL.E.OUT
P4001
TO FE HEAD
AE HEAD
GND
A.HEAD R
A.HEAD W
CTL.HEAD(-)
CTL.HAED(+)
P4002
TO A/C HEAD
A HEAD R
A GND
FUL.E.IN
A.HEAD W
A INSEL
AUDIO IN
TUN AUDIO
A.RF OUT
TO SUB MAIN (Page:3-19 / A-9)
CTL.HEAD(+)
CTL.HEAD(-)
NTSC(L)
VTR(H)
REG 12.3V
POFFH
UNREG 14V
SNSW5V
MGND
CYL GND
TO SYSTEM CONTROL & SERVO SECTION (Page:3-11 / A-1) (Page:3-13 / B-10, C-10)
MESECAM H
INSEL 1
SNSW5V
UNREG -29V
HEATER +
HEATER -
TO TIMER SECTION (Page:3-20 / D-1)
HEATER(-)
HEATER(+)
UNREG-29V
GND
GND
V NON SW 5V
S NON SW 5V
MOTOR GND
REG 12.3V
UNREG 14V
POWER OFF(L)
NON SW 12V
UNREG 45V
P1001
TO POWER P1102 (Page:3-6 / D-8)
GND(TU)
C.VIDEO
VTR 12V
A RF OUT
PK704
RF CONVERTER UNIT
AFC DEF
AFC(S)
N SW 12V
VTR 12V
GND
PK701
TO TV DEMODULATOR PACK PK701 (Page:3-39 / F-2)
REG 12.3V
BU
BH
BL
BT
SYNC(L)
PK702
TO TV DEMODULATOR PACK PK702 (Page:3-39 / F-3)
A.DEF.S
IF
REG 12.3V
TU AUDIO
GND
BS2
VIDEO MUTE
TU VIDEO
PK703
TO TV DEMODULATOR PACK PK703 (Page:3-40 / F-5)
BS2
A.DEF.S
SYNCL
BANDU
BANDVL
AFC S
AFC DEF
DAC
TO TIMER SECTION (Page:3-20 / C-1)
S TAB
TRICK L
VEE L
VSS
ART V/H/N
REC H
HSW
D REC H
TRK ENV
TO SYSTEM CONTROL & SERVO SECTION (Page:3-11 / D-1) (Page:3-13 / B-10, C-10)
REC C
RF C
TRK ENV
REC Y
RF Y
D REC H
REG 5V
HEAD SW
GND
HSS
P3001
TO HEAD AMP P501 (Page:3-33/ C-1)
JK3001
VEJ1393
A IN
A OUT
V IN
V OUT
SD2AM,SD3EE ONLY
SD1A/EA/BA,SD2BA ONLY
PK703-1 PLAY
160mVp-p(0.5msec. div)
P1001-1 PLAY
500mVp-p(1msec. div)
P1001-2 PLAY
0.7Vp-p(1msec. div)
QR4002
UN2213
(INV)
QR3001
UN2111
QR3002
UN2111
QR1001
UN2211
QR7003
UN2213
Q7001
2SB710-RS
SD1A/EA ONLY
(STABI)
Q7003
2SD602
IC7001
AN5043
IC3003
UPC78N05H
QR3003
UN2213
(INV)
QR7002
UN2213
I7003
VWJ0023-5
SD1BA,SD2AM/BA, SD3EE ONLY
D1001
MA178
D3004
SD1A/EA/BA
SD2BA/AM
: JUMPER
SD3EE
: MA165
D3003
MA165
L3005
100u
C3019
6V47
C3025
16V10
C3026
16V10
C3016
16V47
C3015
0.01
C1007
16V100
C1003
6V100
C1002
25V100
C1001
10V33
C7005
0.01
C7004 0.027
C7003
0.082
C7002
0.068
C7001
0.1
C7006
0.01
C7007
0.01
C7009
50V10
C7008
1500
C7006 0.01
C3028
0.1
C3029
1
C7010 0.01
C7011 16V47
C7012
16V22
L7002
100u
L7004
100u
L3006
1u
R7020
150
R7021
150
R3020
2200
C3030
0.1
R3021
10K
TL7010
TL7001
TL4012
TL4003
TL4002
TL4013
TL4010
TL3040
TL4011
TL3002
TL3041
TLGND1
TL1002
12V
R4001
10
C4026
16V10
R4002
680
R4033
10K
R4034
8200
R3018
75
R3019
75
R3023
0
R7013
1K
R7011
5600
R7012
3300
R7009
10
R7001
22K
R7005
120K
R7006
10K
R7004
100K
R7003
47K
R7002
47K
R7008
1500
R7007
10K
R7016
1K
R7017
1K
R7014
SD2AM,SD3EE 0
SD1A/EA/BA 1K
SD2BA 1K
L7003
VLF0145
L3011
470
C3012
1K
C3018
0.01
C3022
0.01
C3024
0.01
C3027
0.01
C3029
0.01
C3030
0.01
C3031
0.01
C3032
0.01
C3033
0.01
C3034
0.01
C3035
0.01
C3036
0.01
C3037
0.01
C3038
0.01
C3039
0.01
C3040
0.01
C3041
0.01
C3042
0.01
C3043
0.01
C3044
0.01
C3045
0.01
C3046
0.01
C3047
0.01
C3048
0.01

SUB MAIN SCHEMATIC DIAGRAM

CAPSTAN SERVO PHASE LOOP
CAPSTAN SERVO SPEED LOOP
AUDIO MAIN SIGNAL PATH IN PLAYBACK MODE
AUDIO MAIN SIGNAL PATH IN REC MODE

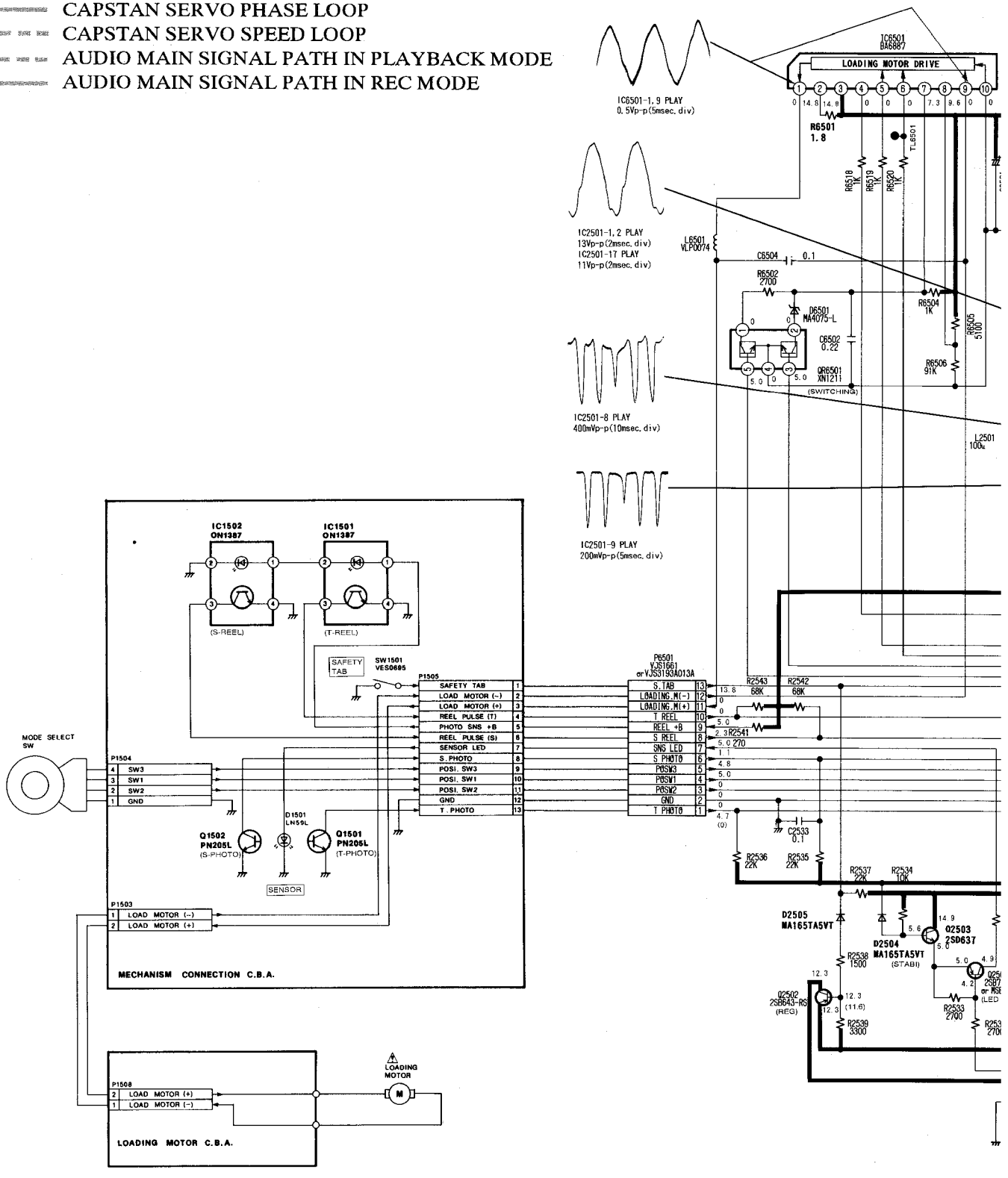

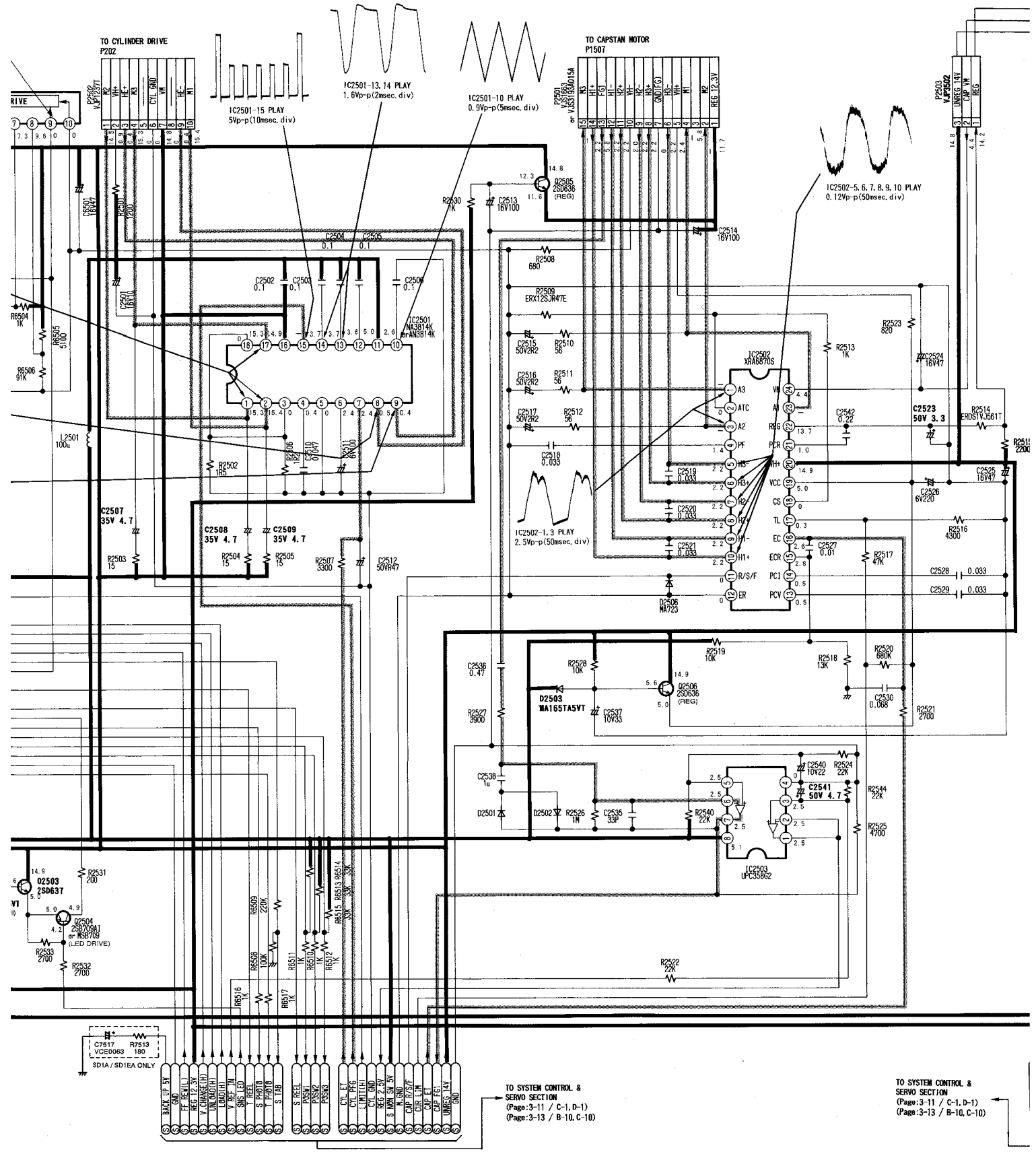
TO CYLINDER DRIVE
P202
TO CAPSTAN MOTOR
P1507
IC2501-15 PLAY
5Vp-p(10msec. div)
IC2501-13, 14 PLAY
1.6Vp-p(2msec. div)
IC2501-10 PLAY
0.9Vp-p(5msec. div)
IC2502-5, 6, 7, 8, 9, 10 PLAY
0.12Vp-p(50msec. div)
IC2502-1, 3 PLAY
2.5Vp-p(50msec. div)
IC2501
NA3814K
or AN3814K
IC2502
XRA6870S
IC2503
UPC35862
Q2505
2SD636
(REG)
Q2506
2SD636
(REG)
Q2503
2SD637
Q2504
2SB709AI
or MSB709
(LED DRIVE)
D2503
MA165TA5VT
D2506
MA723
C2507
35V 4.7
C2508
35V 4.7
C2509
35V 4.7
C2523
50V 3.3
C2541
50V 4.7
C7517
VCE0063
R7513
180
SD1A / SD1EA ONLY
BACK UP 5V
GND
FF REWIL
REG 12.3V
V CHANGE(H)
UNLOAD(H)
LOAD(H)
V REF IN
SNS LED
T REEL
S PHOTO
T PHOTO
S TAB
S REEL
PSW1
PSW2
PSW3
CYL E7
CYL PF6
LIMIT(H)
CYL GND
REG 2.5V
S NON SW 5V
W GND
CAP R/S/F
CUR LIM
CAP E1
CAP F61
UNREG 14V
GND
TO SYSTEM CONTROL &
SERVO SECTION
(Page:3-11 / C-1, D-1)
(Page:3-13 / B-10, C-10)
TO SYSTEM CONTROL &
SERVO SECTION
(Page:3-11 / C-1, D-1)
(Page:3-13 / B-10, C-10)

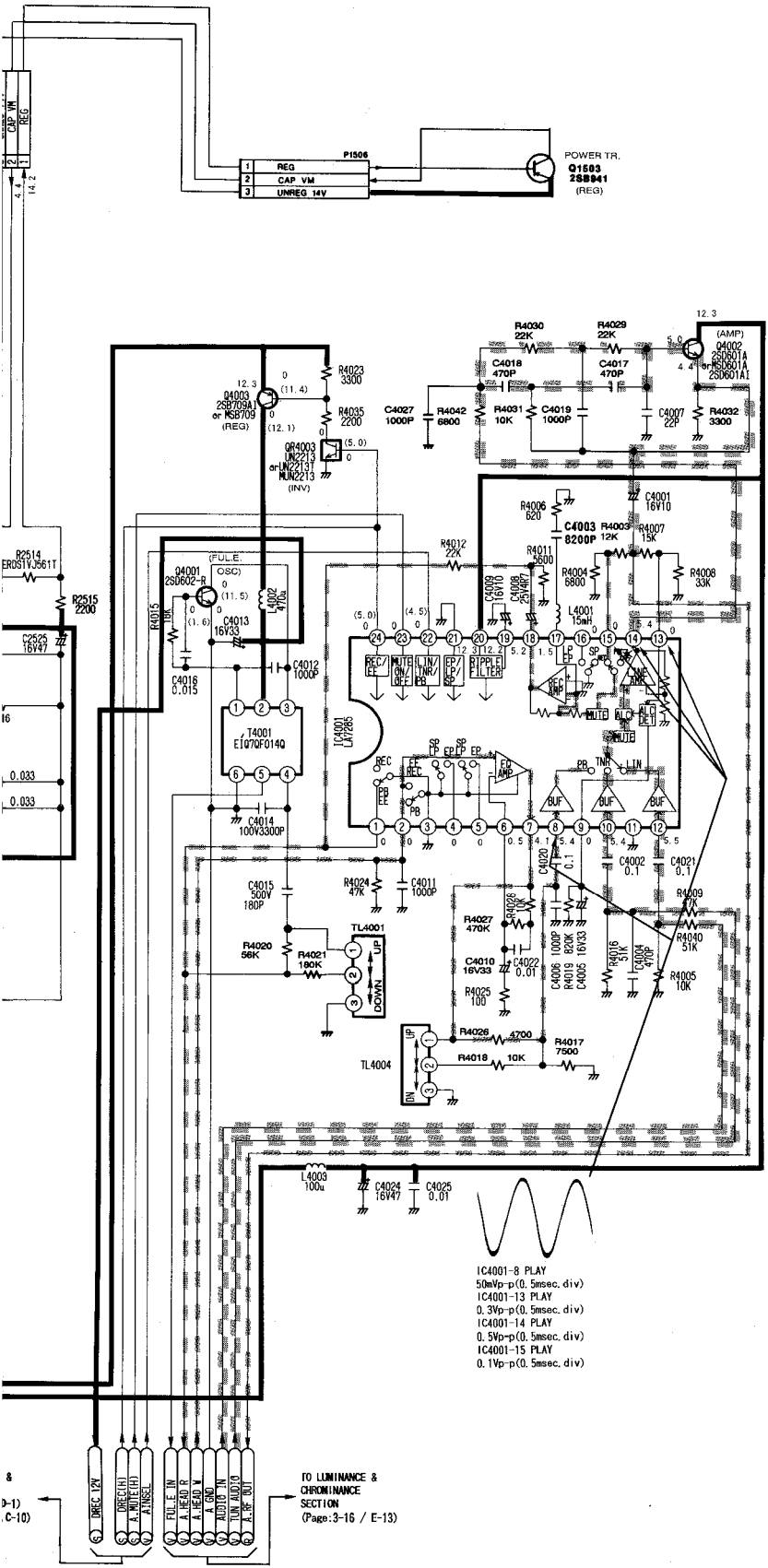
P1506
REG
CAP VM
UNREG 14V
POWER TR.
Q1503
2SB941
(REG)
Q4003
2SB709A
or MSB709
(REG)
QR4003
UN2213
or UN2215T
MUN2213
(INV)
Q4001
2SD602-R
(FULE. OSC)
T4001
EI070F014Q
IC4001
LA7285
REC/EE
MUTE ON/OFF
LIN/TNR/PB
EP/LP/SP
RIPPLE FILTER
REC AMP
MUTE
ALC DET
TNR AMP
EQ AMP
BUF
TL4001
UP
DOWN
TL4004
IN
Q4002
2SD601A
or MSD601A
2SD601AI
(AMP)
L4001
15mH
L4002
470u
L4003
100u
C4024
16V47
C4025
0.01
IC4001-8 PLAY
50mVp-p(0.5msec.div)
IC4001-13 PLAY
0.3Vp-p(0.5msec.div)
IC4001-14 PLAY
0.5Vp-p(0.5msec.div)
IC4001-15 PLAY
0.1Vp-p(0.5msec.div)
DREC 12V
DREC(H)
A.MUTE(H)
A.INSCL
FULE IN
A.HEAD R
A.HEAD V
A.GND
AUDIO IN
TUN AUDIO
A.RF OUT
TO LUMINANCE &
CHROMINANCE
SECTION
(Page:3-16 / E-13)

TIMER SECTION IN MAIN & OPERATION SCHEMATIC DIAGRAM

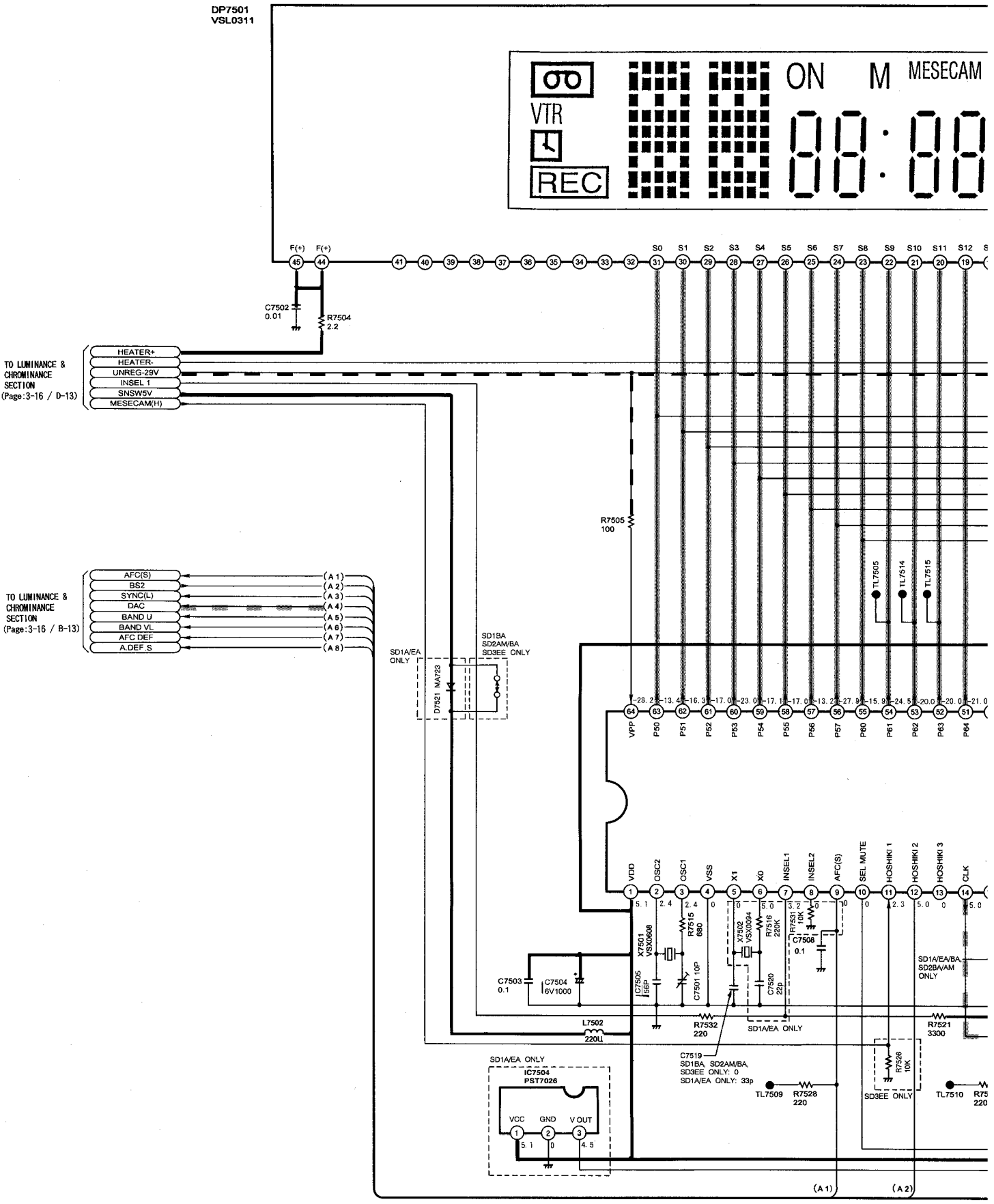

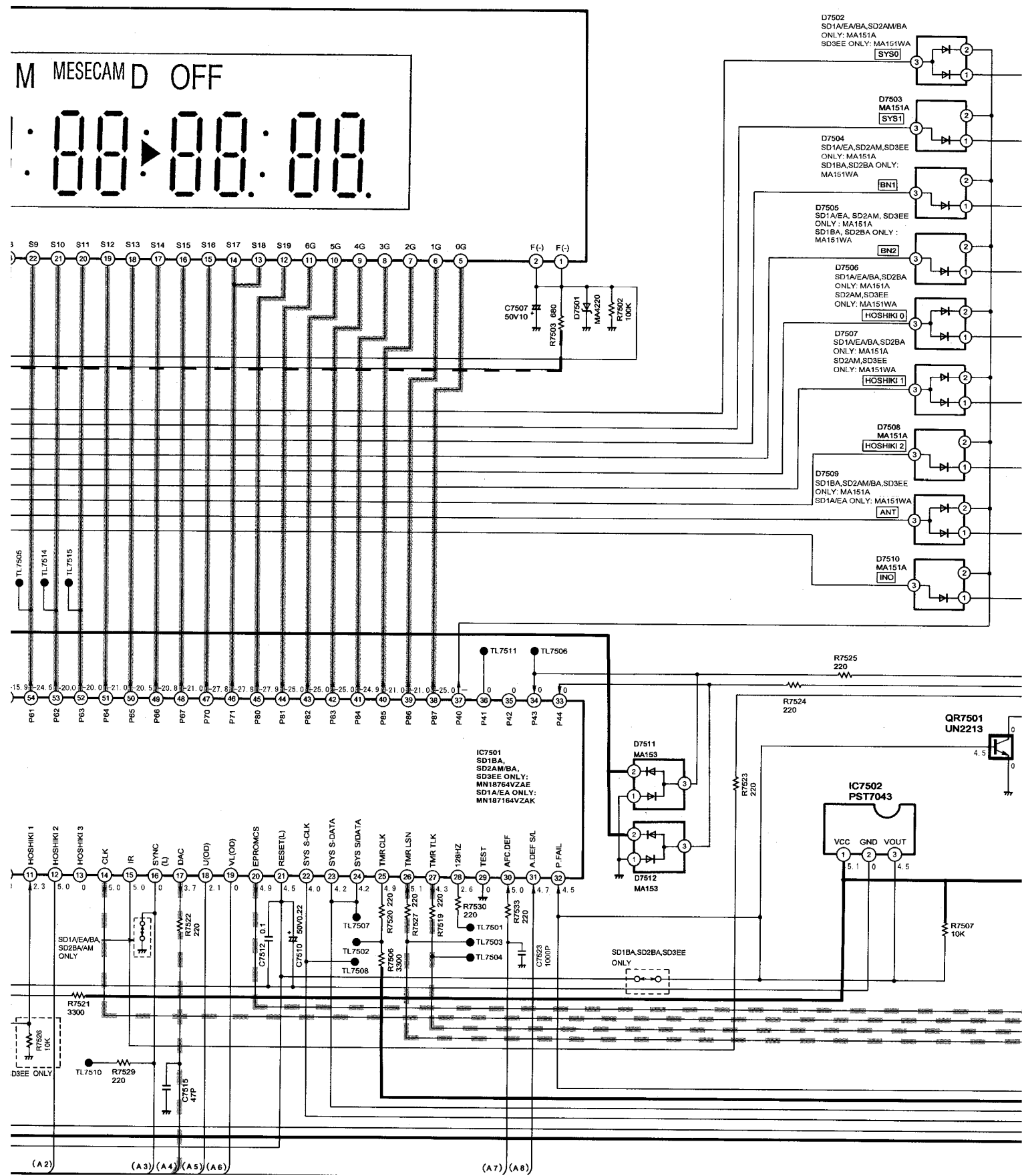
M MESECAM D OFF
D7502
SD1A/EA/BA,SD2AM/BA
ONLY: MA151A
SD3EE ONLY: MA151WA
SYS0
D7503
MA151A
SYS1
D7504
SD1A/EA,SD2AM,SD3EE
ONLY: MA151A
SD1BA,SD2BA ONLY:
MA151WA
BN1
D7505
SD1A/EA, SD2AM, SD3EE
ONLY : MA151A
SD1BA, SD2BA ONLY :
MA151WA
BN2
D7506
SD1A/EA/BA,SD2BA
ONLY: MA151A
SD2AM,SD3EE
ONLY: MA151WA
HOSHIKI 0
D7507
SD1A/EA/BA,SD2BA
ONLY: MA151A
SD2AM,SD3EE
ONLY: MA151WA
HOSHIKI 1
D7508
MA151A
HOSHIKI 2
D7509
SD1BA,SD2AM/BA,SD3EE
ONLY: MA151A
SD1A/EA ONLY: MA151WA
ANT
D7510
MA151A
INO
C7507
50V10
R7503 680
D7501
MA4220
R7502
100K
TL7505
TL7514
TL7515
TL7511
TL7506
R7525
220
R7524
220
QR7501
UN2213
IC7501
SD1BA,
SD2AM/BA,
SD3EE ONLY:
MN187164VZAE
SD1A/EA ONLY:
MN187164VZAK
D7511
MA153
D7512
MA153
R7523
220
IC7502
PST7043
VCC GND VOUT
R7507
10K
SD1A/EA/BA,
SD2BA/AM
ONLY
R7522
220
C7512
0.1
C7510
50V0.22
TL7507
TL7502
TL7508
R7520 220
R7506
3300
R7527 220
R7519 220
R7530
220
TL7501
TL7503
TL7504
R7533
220
C7523
1000P
SD1BA,SD2BA,SD3EE
ONLY
R7521
3300
R7526
10K
D3EE ONLY
TL7510
R7529
220
C7515
47P
HOSHIKI 1
HOSHIKI 2
HOSHIKI 3
CLK
IR
SYNC (L)
DAC
U(OD)
VL(OD)
EPROMCS
RESET(L)
SYS S-CLK
SYS S-DATA
SYS S/DATA
TMR CLK
TMR LSN
TMR TLK
128HZ
TEST
AFC DEF
A.DEF S/L
P.FAIL
(A2)
(A3)
(A4)
(A5)
(A6)
(A7)
(A8)

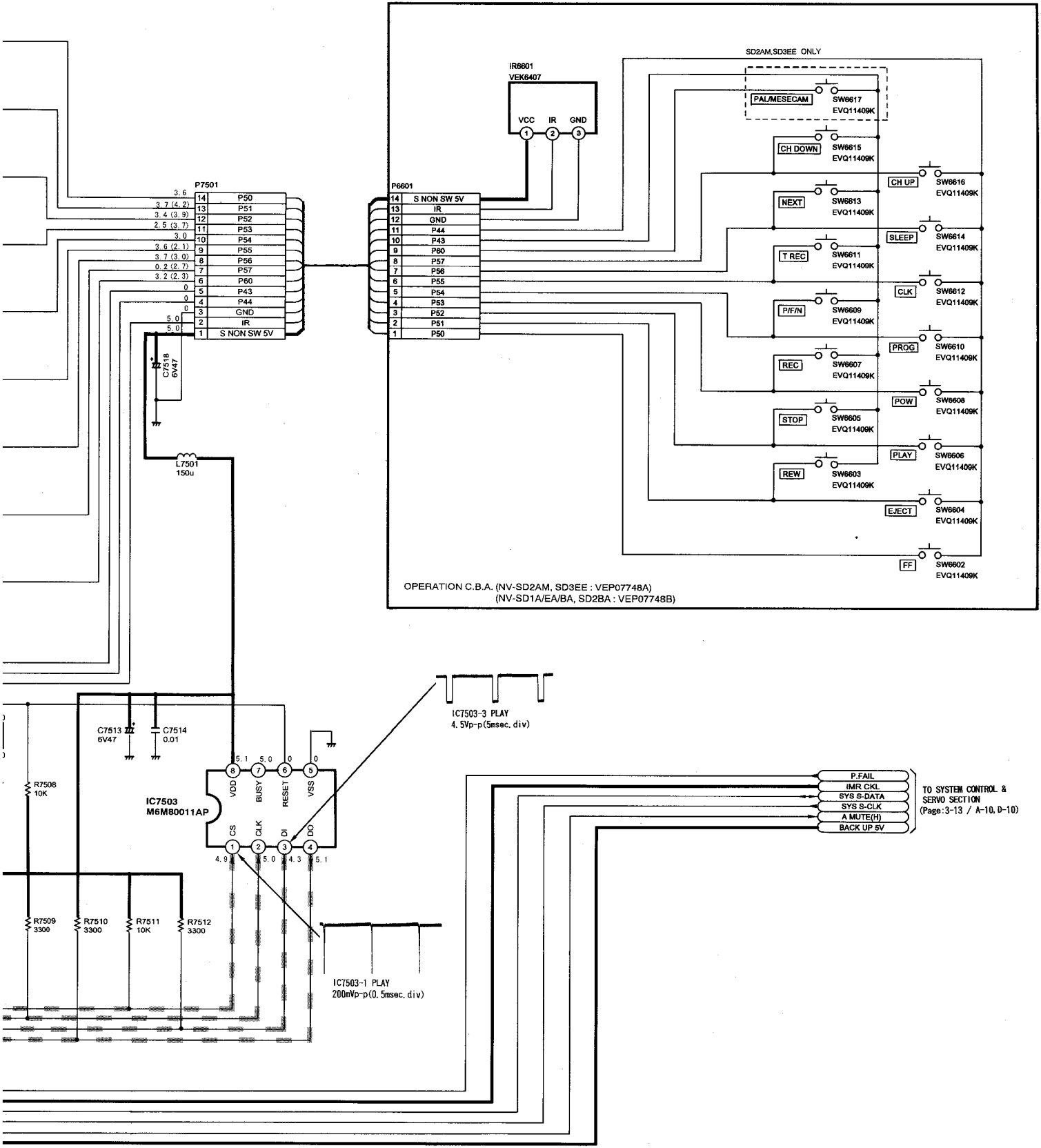
SD2AM,SD3EE ONLY
IR6601
VEK6407
VCC
IR
GND
P7501
P6601
S NON SW 5V
IR
GND
P44
P43
P60
P57
P56
P55
P54
P53
P52
P51
P50
PAL/MESECAM
SW6617
EVQ11409K
CH DOWN
SW6615
EVQ11409K
CH UP
SW6616
EVQ11409K
NEXT
SW6613
EVQ11409K
SLEEP
SW6614
EVQ11409K
T REC
SW6611
EVQ11409K
CLK
SW6612
EVQ11409K
P/F/N
SW6609
EVQ11409K
PROG
SW6610
EVQ11409K
REC
SW6607
EVQ11409K
POW
SW6608
EVQ11409K
STOP
SW6605
EVQ11409K
PLAY
SW6606
EVQ11409K
REW
SW6603
EVQ11409K
EJECT
SW6604
EVQ11409K
FF
SW6602
EVQ11409K
OPERATION C.B.A. (NV-SD2AM, SD3EE : VEP07748A)
(NV-SD1A/EA/BA, SD2BA : VEP07748B)
C7518
6V47
L7501
150u
C7513
6V47
C7514
0.01
R7508
10K
IC7503
M6M80011AP
VDD
BUSY
RESET
VSS
CS
CLK
DI
DO
R7509
3300
R7510
3300
R7511
10K
R7512
3300
IC7503-3 PLAY
4.5Vp-p(5msec.div)
IC7503-1 PLAY
200mVp-p(0.5msec.div)
P.FAIL
iMR CKL
SYS S-DATA
SYS S-CLK
A MUTE(H)
BACK UP 5V
TO SYSTEM CONTROL &
SERVO SECTION
(Page:3-13 / A-10, D-10)

NTSC PACK SCHEMATIC DIAGRAM (NV-SD2AM ONLY)

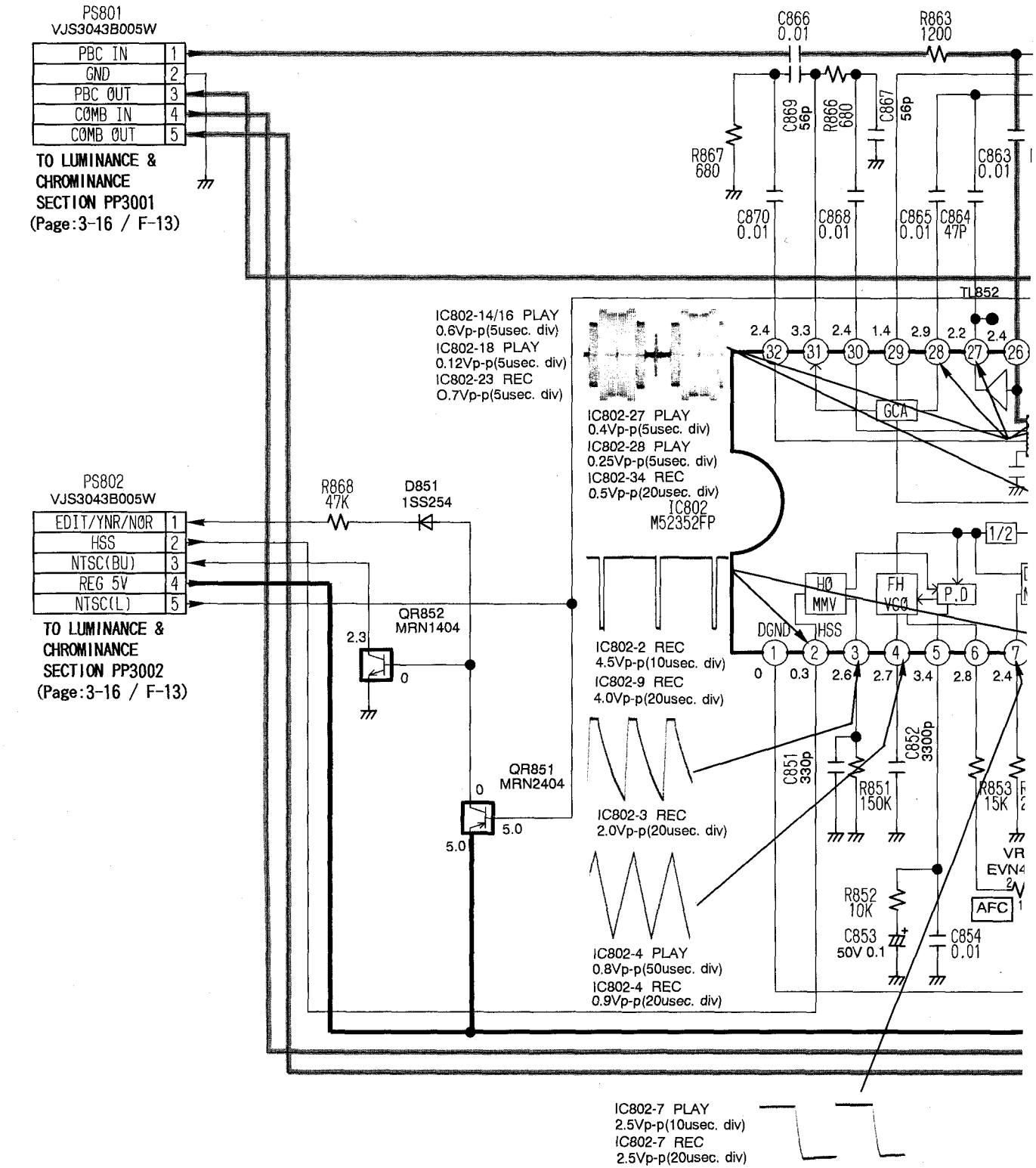

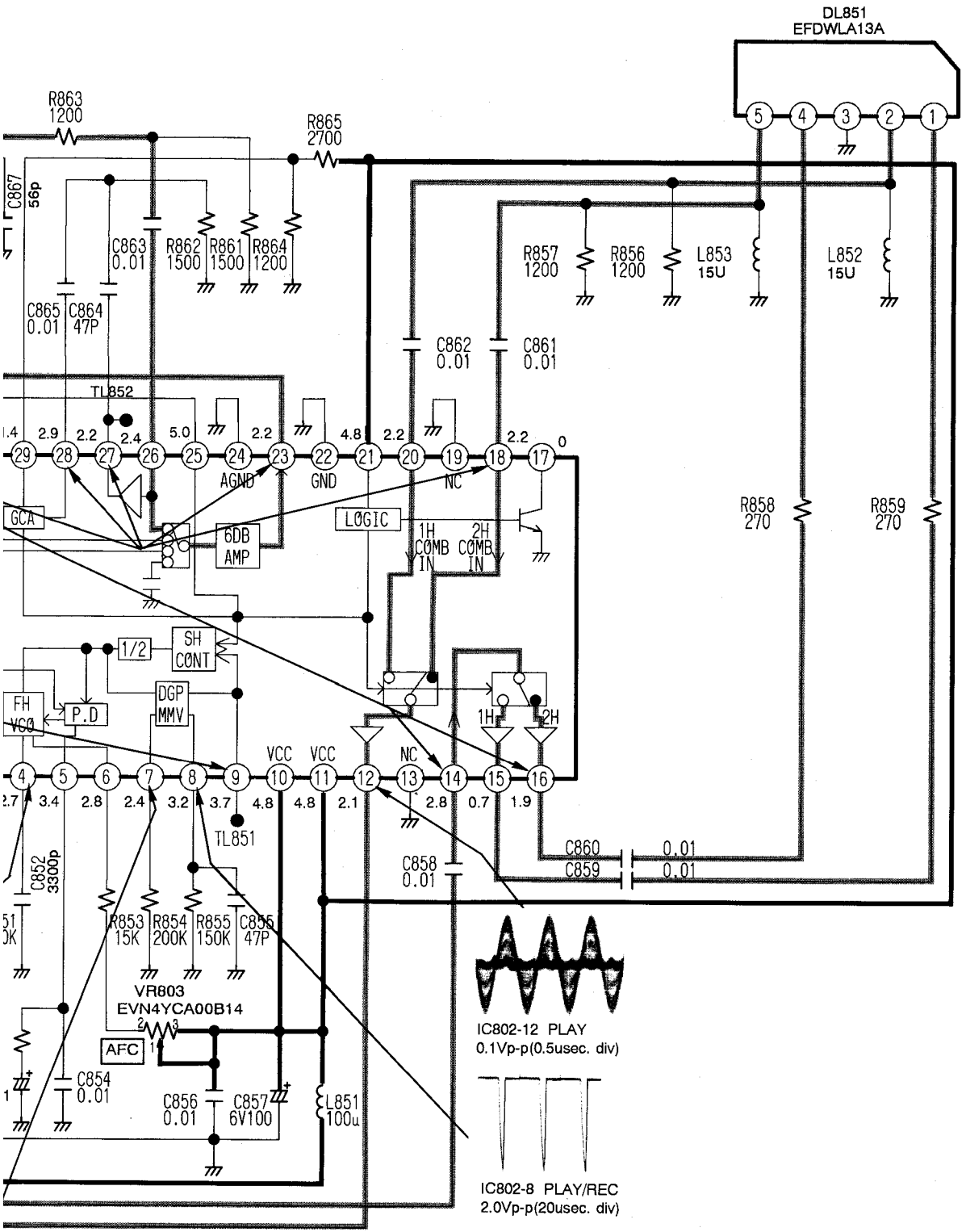
DL851
EFDWLA13A
R863
1200
R865
2700
C867
56p
C863
0.01
R862
1500
R861
1500
R864
1200
C865
0.01
C864
47P
R857
1200
R856
1200
L853
15U
L852
15U
C862
0.01
C861
0.01
TL852
AGND
GND
NC
GCA
6DB
AMP
LOGIC
1H
COMB
IN
2H
COMB
IN
R858
270
R859
270
1/2
SH
CONT
FH
VCO
P.D
DGP
MMV
1H
2H
VCC
VCC
NC
TL851
C852
3300p
C858
0.01
C860
0.01
C859
0.01
R853
15K
R854
200K
R855
150K
C855
47P
VR803
EVN4YCA00B14
AFC
C854
0.01
C856
0.01
C857
6V100
L851
100u
IC802-12 PLAY
0.1Vp-p(0.5usec. div)
IC802-8 PLAY/REC
2.0Vp-p(20usec. div)

HEAD AMP SCHEMATIC DIAGRAM

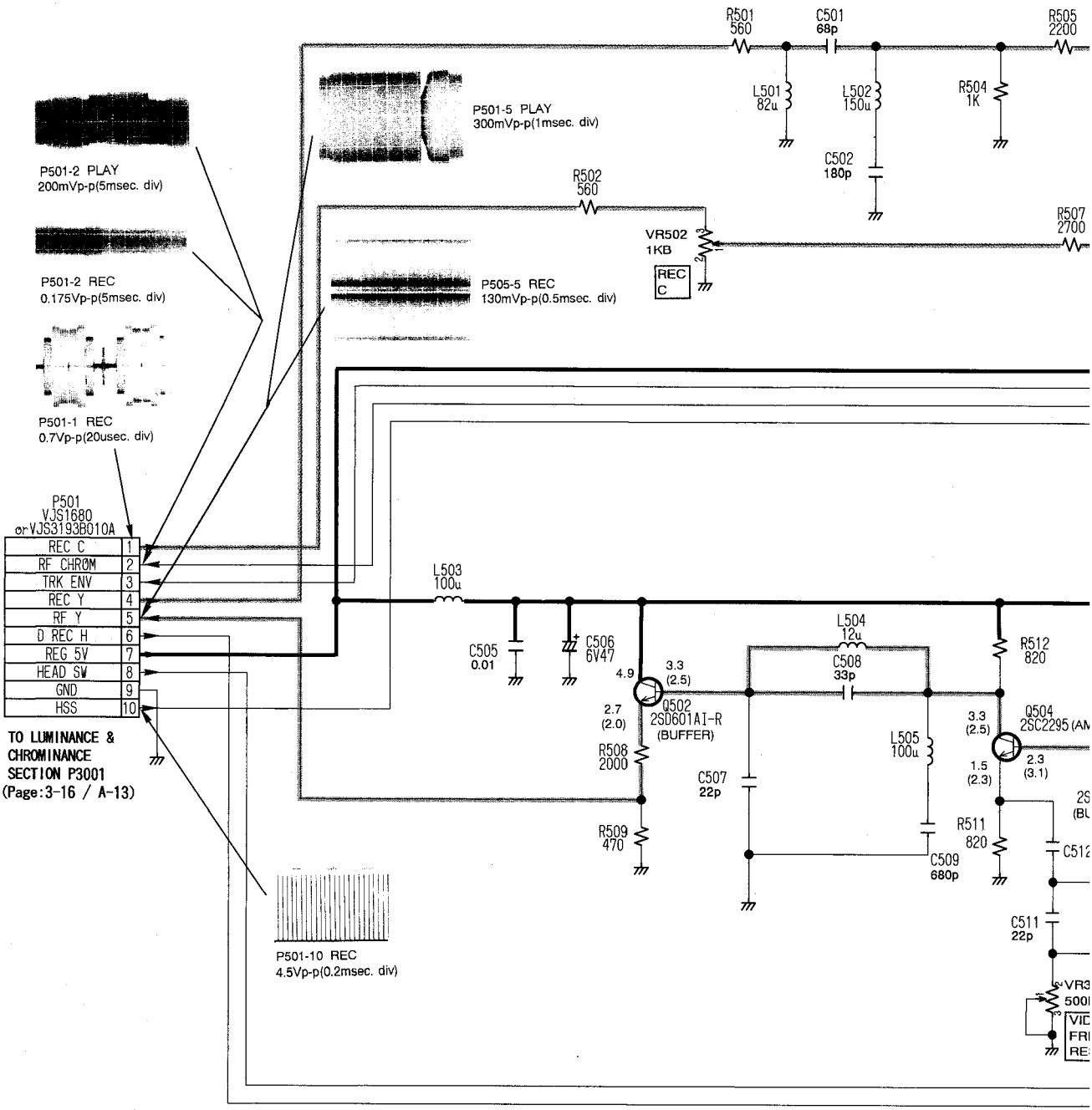

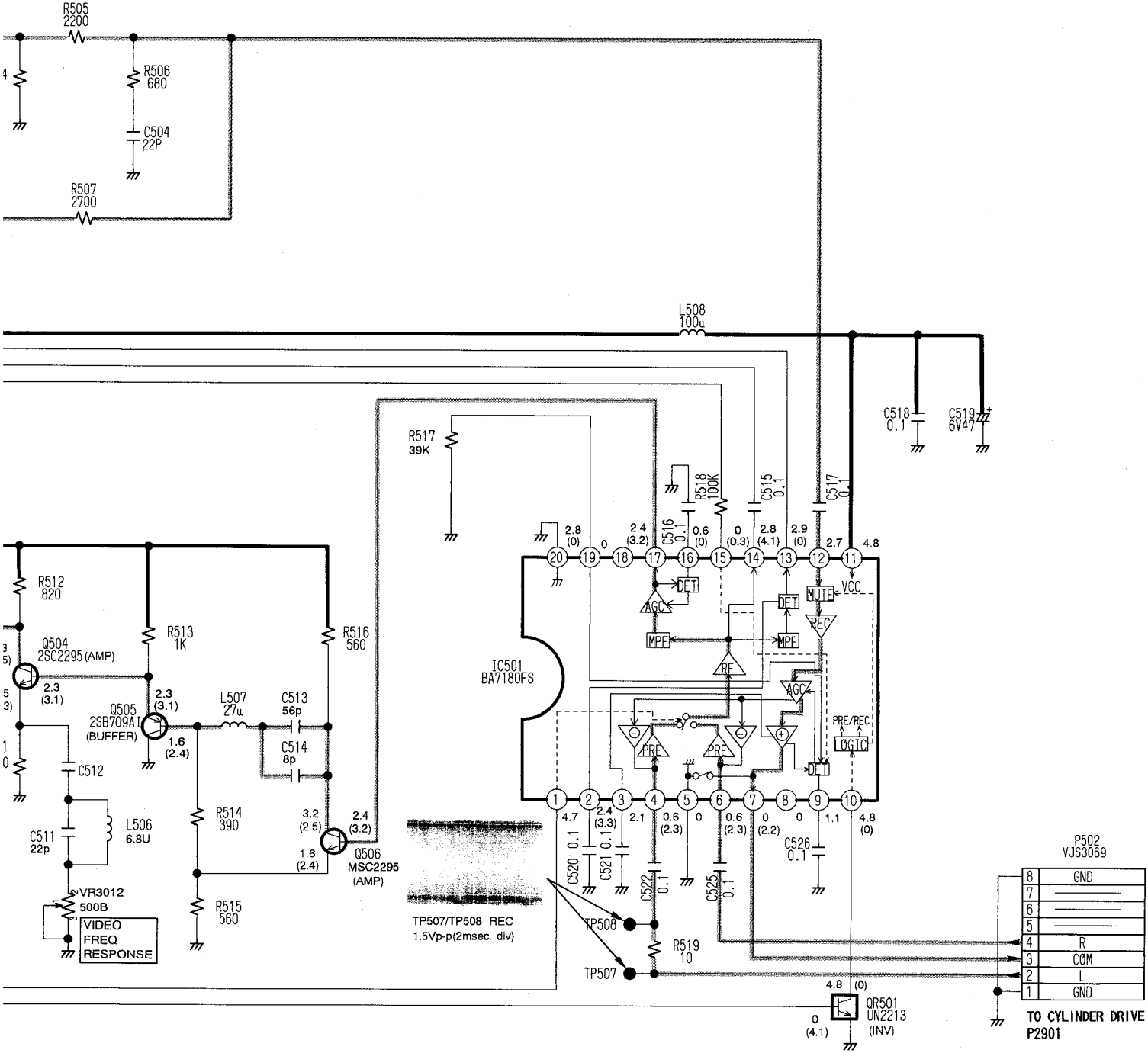
R505
2200
R506
680
C504
22P
R507
2700
L508
100u
C518
0.1
C519
6V47
R517
39K
R518
100K
C515
0.1
C517
0.1
C516
0.1
IC501
BA7180FS
DET
AGC
MPF
RF
MUTE
VCC
REC
PRE
PRE/REC
LOGIC
R512
820
R513
1K
R516
560
Q504
2SC2295 (AMP)
Q505
2SB709A1
(BUFFER)
L507
27u
C513
56p
C514
8p
C512
C511
22p
L506
6.8U
R514
390
R515
560
Q506
MSC2295
(AMP)
VR3012
500B
VIDEO
FREQ
RESPONSE
TP507/TP508 REC
1.5Vp-p(2msec. div)
TP508
TP507
R519
10
C520
0.1
C521
0.1
C522
0.1
C525
0.1
C526
0.1
QR501
UN2213
(INV)
P502
VJS3069
GND
R
COM
L
GND
TO CYLINDER DRIVE
P2901

DEMODULATOR PACK SCHEMATIC DIAGRAM

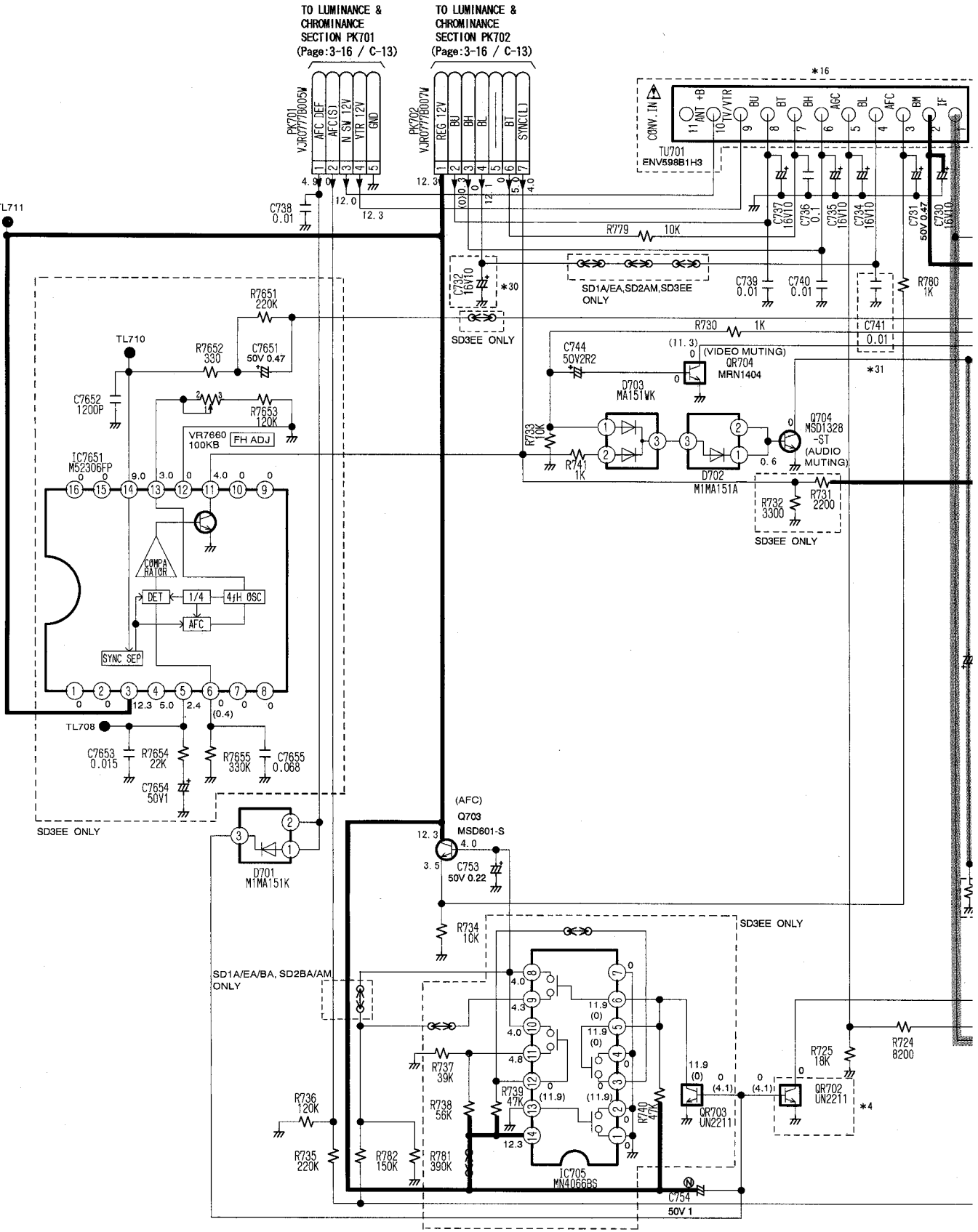

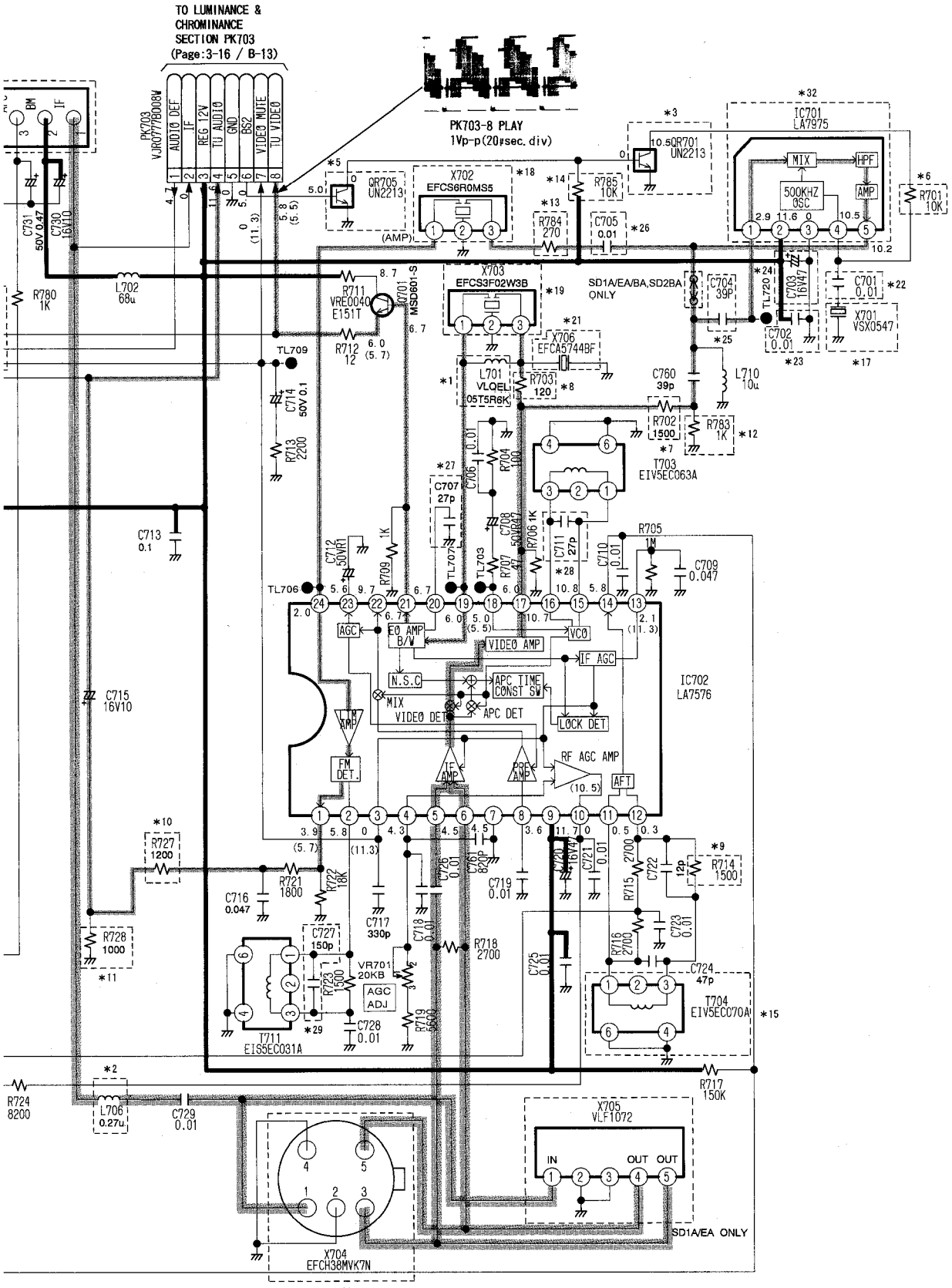
TO LUMINANCE & CHROMINANCE SECTION PK703 (Page:3-16 / B-13)
PK703 VJR0778D008W
AUDIO DEF
IF
REG 12V
TU AUDIO
GND
BS2
VIDEO MUTE
TU VIDEO
PK703-8 PLAY
1Vp-p(20μsec. div)
IC701 LA7975
MIX
HPF
AMP
500KHZ OSC
IC702 LA7576
EQ AMP B/W
VIDEO AMP
VCO
IF AGC
N.S.C
APC TIME CONST SW
MIX
VIDEO DET
APC DET
LOCK DET
LIM AMP
FM DET.
IF AMP
PRE AMP
RF AGC AMP
AFT
AGC
X702 EFCS6R0MS5
X703 EFCS3F02W3B
X706 EFCA5744BF
X701 VSX0547
X704 EFCH38MVK7N
X705 VLF1072
IN
OUT
OUT
SD1A/EA/BA,SD2BA ONLY
SD1A/EA ONLY
T703 EIV5EC063A
T704 EIV5EC070A
T711 EIS5EC031A
VR701 20KB
AGC ADJ
TL706
TL709
TL707
TL703
TL720
Q701 MSD601-S
Q705 UN2213
Q701 VRE0040 E151T
L701 VLQEL 05T5R6K
L702 68u
L706 0.27u
L710 10u
R780 1K
R724 8200
R728 1000
R727 1200
R721 1800
R722 18K
R723 1500
R719 5600
R718 2700
R717 150K
R716 2700
R715 2700
R714 1500
R713 2200
R712 12
R711
R784 270
R785 10K
R701 10K
R702 1500
R703 120
R704 100
R705 1M
R706 1K
R707 47
R709 1K
R783 1K
C731 50V 0.47
C730 16V10
C714 50V 0.1
C713 0.1
C715 16V10
C716 0.047
C717 330p
C718 0.01
C719 0.01
C720 16V47
C721 0.01
C722 12p
C723 0.01
C724 47p
C725 0.01
C726 0.01
C727 150p
C728 0.01
C729 0.01
C760 39p
C761 820p
C702 0.01
C703 16V47
C704 39P
C705 0.01
C706 0.01
C707 27p
C708 50V47
C709 0.047
C710 0.01
C711 27p
C712 50VR1
C701 0.01
Q705 UN2213
10.5Q701 UN2213

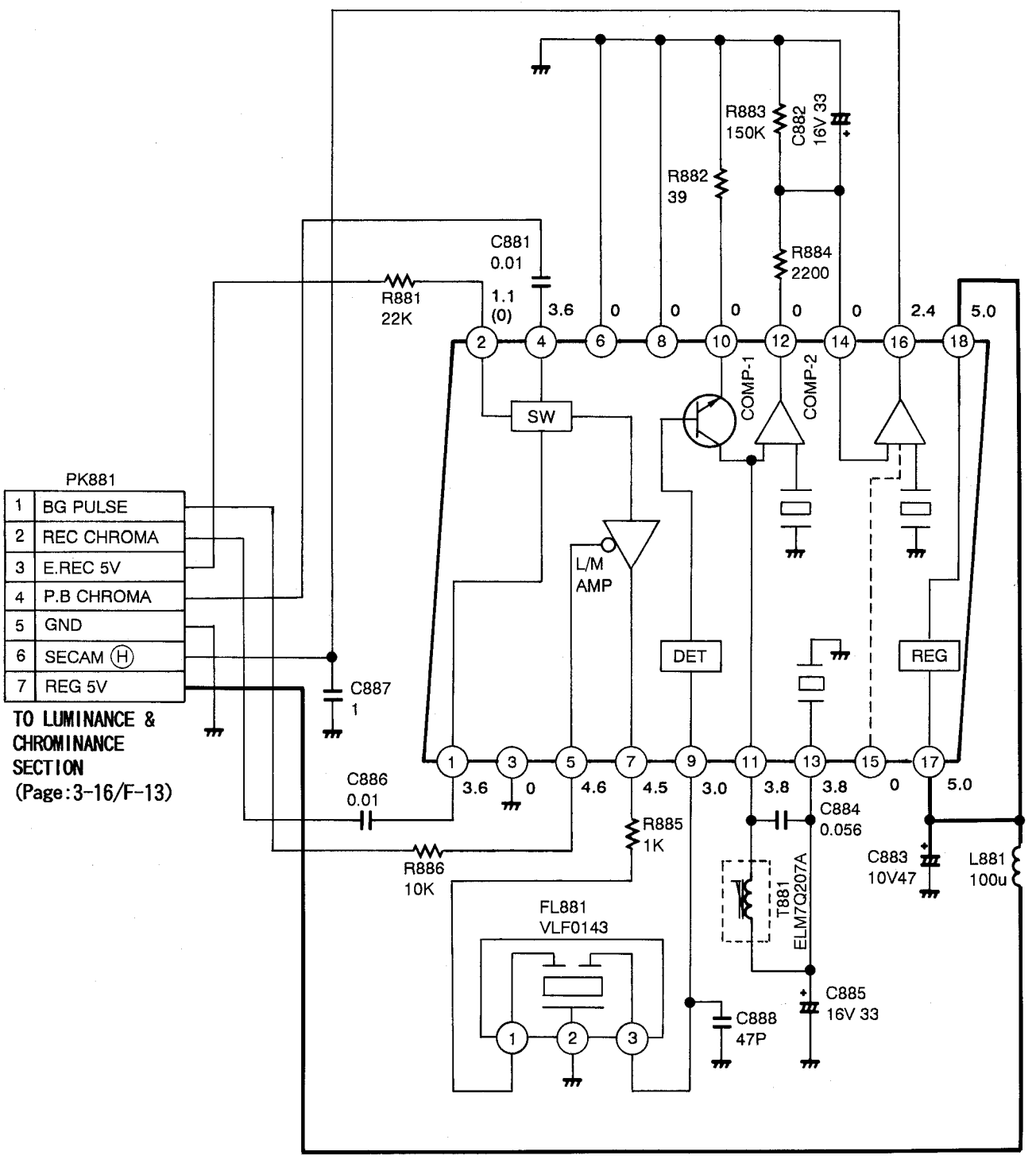
R883
150K
C882
16V 33
R882
39
R884
2200
C881
0.01
R881
22K
1.1
(0)
3.6
0
0
0
0
0
2.4
5.0
2
4
6
8
10
12
14
16
18
COMP-1
COMP-2
SW
L/M
AMP
DET
REG
PK881
1 BG PULSE
2 REC CHROMA
3 E.REC 5V
4 P.B CHROMA
5 GND
6 SECAM (H)
7 REG 5V
TO LUMINANCE &
CHROMINANCE
SECTION
(Page:3-16/F-13)
C887
1
C886
0.01
1
3
5
7
9
11
13
15
17
3.6
0
4.6
4.5
3.0
3.8
3.8
0
5.0
C884
0.056
R885
1K
R886
10K
C883
10V47
L881
100u
T881
ELM7Q207A
FL881
VLF0143
C885
16V 33
C888
47P