ЛИСТ 1

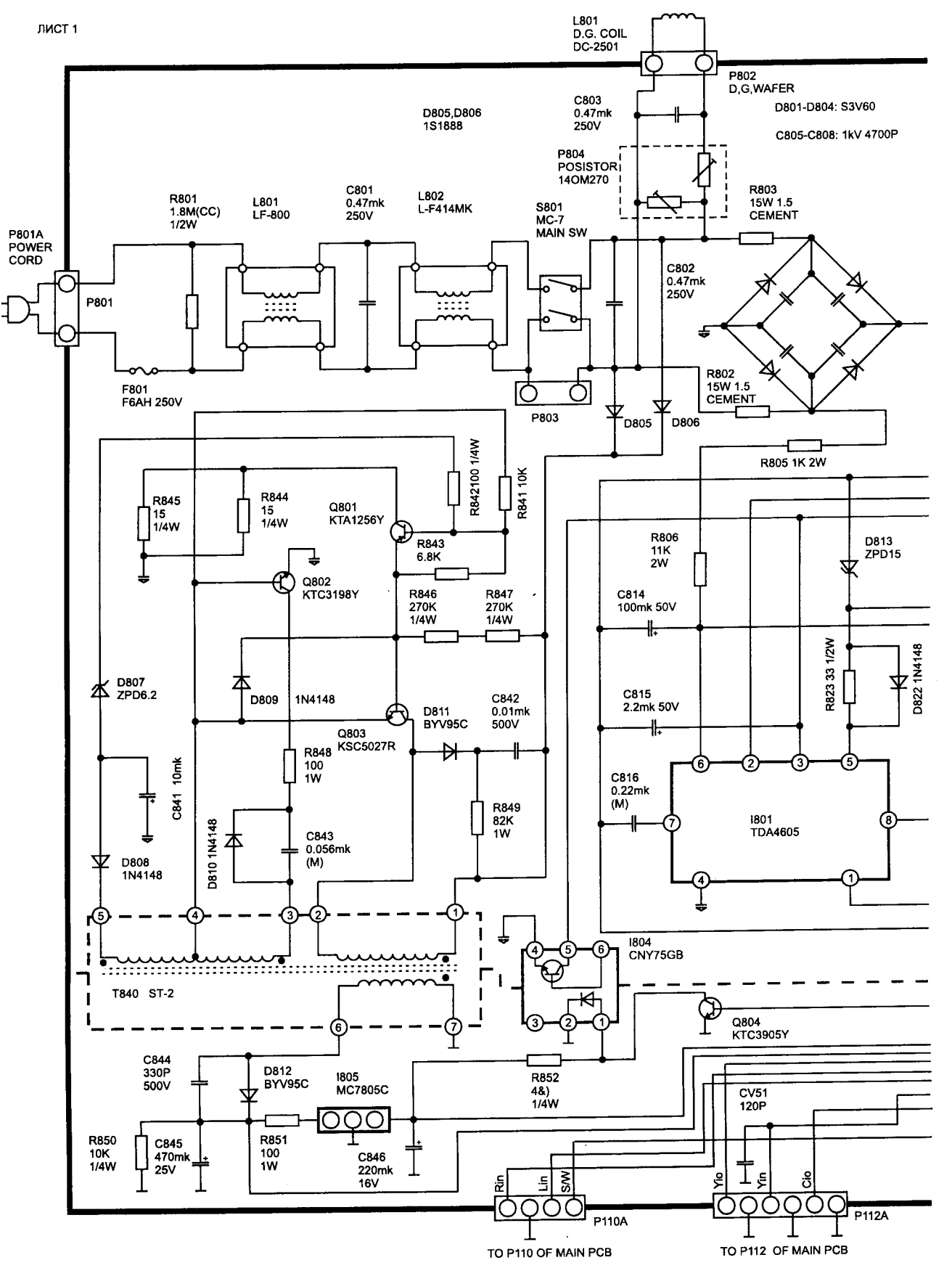
L801
D.G. COIL
DC-2501
P802
D,G,WAFER
D801-D804: S3V60
C805-C808: 1kV 4700P
C803
0.47mk
250V
D805,D806
1S1888
P804
POSISTOR
14OM270
R803
15W 1.5
CEMENT
R801
1.8M(CC)
1/2W
L801
LF-800
C801
0.47mk
250V
L802
L-F414MK
S801
MC-7
MAIN SW
P801A
POWER
CORD
P801
C802
0.47mk
250V
F801
F6AH 250V
P803
D805
D806
R802
15W 1.5
CEMENT
R805 1K 2W
R845
15
1/4W
R844
15
1/4W
Q801
KTA1256Y
R842100 1/4W
R841 10K
R843
6.8K
Q802
KTC3198Y
R846
270K
1/4W
R847
270K
1/4W
R806
11K
2W
D813
ZPD15
C814
100mk 50V
D807
ZPD6.2
D809
1N4148
D811
BYV95C
C842
0.01mk
500V
C815
2.2mk 50V
R823 33 1/2W
D822 1N4148
Q803
KSC5027R
R848
100
1W
C841 10mk
C816
0.22mk
(M)
I801
TDA4605
R849
82K
1W
D810 1N4148
C843
0.056mk
(M)
D808
1N4148
T840 ST-2
I804
CNY75GB
Q804
KTC3905Y
C844
330P
500V
D812
BYV95C
I805
MC7805C
R852
4&)
1/4W
CV51
120P
R850
10K
1/4W
C845
470mk
25V
R851
100
1W
C846
220mk
16V
Rin
Lin
S/W
Yio
Yin
Cio
P110A
P112A
TO P110 OF MAIN PCB
TO P112 OF MAIN PCB

ЛИСТ 2

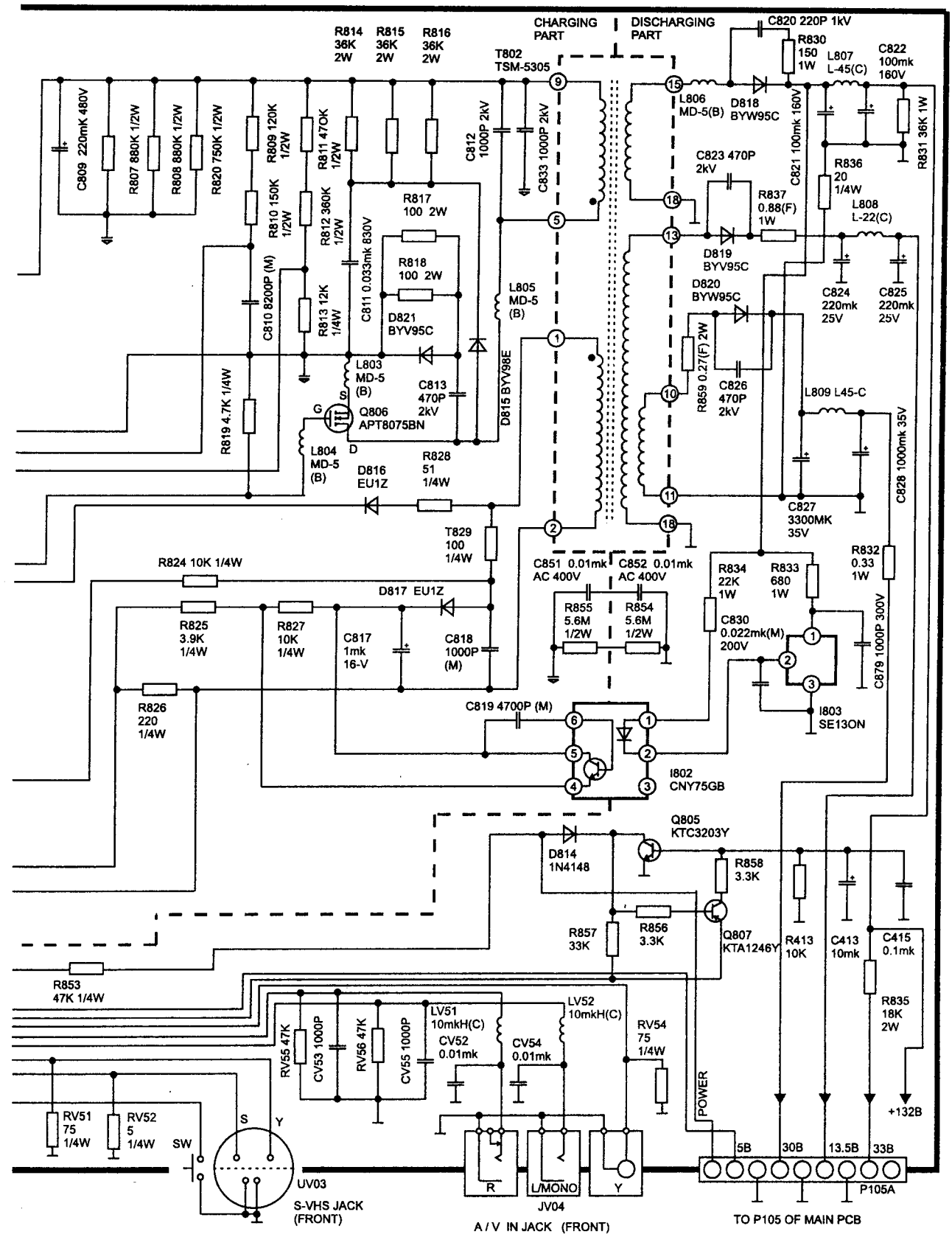
CHARGING PART
DISCHARGING PART
R814 36K 2W
R815 36K 2W
R816 36K 2W
T802 TSM-5305
C820 220P 1kV
R830 150 1W
L807 L-45(C)
C822 100mk 160V
L806 MD-5(B)
D818 BYW95C
C821 100mk 160V
R831 36K 1W
C809 220mK 480V
R807 880K 1/2W
R808 880K 1/2W
R820 750K 1/2W
R809 120K 1/2W
R810 150K 1/2W
R811 47OK 1/2W
R812 360K 1/2W
R813 12K 1/4W
C812 1000P 2kV
C833 1000P 2kV
C823 470P 2kV
R837 0.88(F) 1W
R836 20 1/4W
L808 L-22(C)
R817 100 2W
R818 100 2W
C811 0.033mk 830V
C810 8200P (M)
D821 BYV95C
L805 MD-5 (B)
D819 BYV95C
D820 BYW95C
C824 220mk 25V
C825 220mk 25V
L803 MD-5 (B)
C813 470P 2kV
Q806 APT8075BN
D815 BYY98E
R859 0.27(F) 2W
C826 470P 2kV
L809 L45-C
R819 4.7K 1/4W
L804 MD-5 (B)
D816 EU1Z
R828 51 1/4W
C828 1000mk 35V
C827 3300MK 35V
T829 100 1/4W
R832 0.33 1W
R824 10K 1/4W
C851 0.01mk AC 400V
C852 0.01mk AC 400V
R834 22K 1W
R833 680 1W
D817 EU1Z
R855 5.6M 1/2W
R854 5.6M 1/2W
C830 0.022mk(M) 200V
R825 3.9K 1/4W
R827 10K 1/4W
C817 1mk 16-V
C818 1000P (M)
C879 1000P 300V
I803 SE13ON
R826 220 1/4W
C819 4700P (M)
I802 CNY75GB
Q805 KTC3203Y
D814 1N4148
R858 3.3K
R857 33K
R856 3.3K
Q807 KTA1246Y
R413 10K
C413 10mk
C415 0.1mk
R853 47K 1/4W
R835 18K 2W
LV51 10mkH(C)
LV52 10mkH(C)
RV55 47K
CV53 1000P
RV56 47K
CV55 1000P
CV52 0.01mk
CV54 0.01mk
RV54 75 1/4W
POWER
+132B
RV51 75 1/4W
RV52 5 1/4W
SW
S
Y
UV03
S-VHS JACK (FRONT)
R
L/MONO
Y
JV04
A / V IN JACK (FRONT)
5B
30B
13.5B
33B
P105A
TO P105 OF MAIN PCB